AMEM3-277HAVZ

Click to ORDER samples



Encapsulated

The AMEM3-277HAVZ series is an efficient 3W AC-DC power supply module. Offering a commercial input voltage range of 85-305VAC, output voltage ranges from 3.3-24V, low power consumption, high efficiency, high reliability, and safer isolation.

This new series offers great operating temperatures, from -40°C to 85°C with full power up to 70°C and features an isolation of 4000VAC for improved reliability and system safety. Furthermore, a high MTBF of 1,500,000h, output short circuit protection (OSCP), output over-current protection (OCP) and an output over-voltage protection (OVP) come standard with the series.

The AMEM3-277HAVZ is suitable for grid power, LED, instrumentation, industrial controls, communication, and civil applications.

Features

- Universal Input: 85 - 305VAC/100 - 430VDC
- Operating Temp: -40 °C to +85 °C
- High isolation voltage: 4000VAC
- Low ripple & noise, 100mV(p-p), max.
- Output short circuit, over-current, over-voltage protection
- Low no-load power consumption of 0.1W
- Efficiency up to 79%
- Agency approval: UL 62368-1
- Designed to meet IEC/EN 62368-1, UKCA, EN 60335-1, EN 61558-1

RoHS 3yr Warranty CE UKCA cULus

Summary

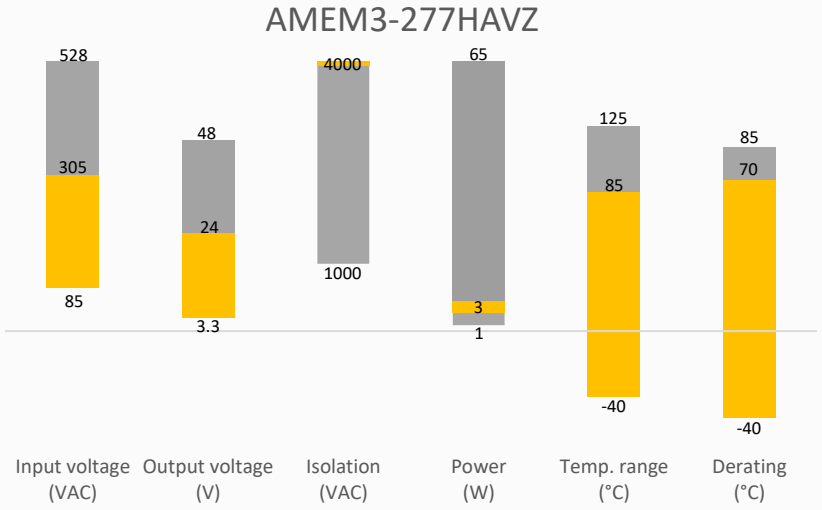

Training



Product Training Video (click to open)

Press Release

Coming Soon!

Application Notes

Applications

Power Grid | Industrial | Telecom | Instrumentation

Models & Specifications

Single Output

Model	Input Voltage (VAC/Hz)	Input Voltage (VDC)	Max Output wattage (W)	Output Voltage (V)	Output Current max (A)	Maximum capacitive load (µF)	Efficiency @ 230VAC Typ. (%)
AMEM3-3S277HAVZ	85-305/47-63	100-430	3	3.3	0.9	3000	70
AMEM3-5S277HAVZ	85-305/47-63	100-430	3	5	0.6	3000	74
AMEM3-9S277HAVZ	85-305/47-63	100-430	3	9	0.333	1200	78
AMEM3-12S277HAVZ	85-305/47-63	100-430	3	12	0.25	1200	79
AMEM3-15S277HAVZ	85-305/47-63	100-430	3	15	0.2	680	79
AMEM3-24S277HAVZ	85-305/47-63	100-430	3	24	0.125	220	79

Note : Add suffix "-ST" for optional screw terminal bottom plate (ex. AMEM3-3S277HAVZ-ST) or "-STD" for optional DIN rail screw terminal bottom plate (ex. AMEM3-3S277HAVZ-STD). Models with terminal bottom plates have their efficiency decreased by 2%.

Input Specifications

Parameters	Conditions	Typical	Maximum	Units
Input current	115VAC		120	mA
	230VAC		70	mA
Inrush current	115VAC	15		A
	230VAC	25		A
Leakage	277VAC, 50Hz		0.25	mA RMS
Recommended External Fuse	1A/300V, Slow blow, *required*			
Input filter	Built-in EMC filter			

Output Specifications

Parameters	Conditions	Typical	Maximum	Units
Voltage accuracy	All models	±3		%
Line regulation	Full load	±0.5		%
Load regulation	0-100% load	±1		%
Ripple & Noise*	20MHz bandwidth	50	100	mV p-p
Hold up time	115VAC	5		ms
	230VAC	50		ms

* Ripple and Noise are measured at 20MHz bandwidth with a 47µF electrolytic capacitor and a 0.1µF ceramic capacitor. Please refer to the application note for specific details.

Isolation Specification

Parameters	Conditions	Typical	Maximum	Units
Tested I/O voltage	60 sec, leakage ≤ 5mA	≥ 4000		VAC
Resistance I/O	500VDC, 25°C, 70%RH	≥ 100		MΩ

General Specifications

Parameters	Conditions	Typical	Maximum	Units
Protection class	Class II			
Overvoltage category	OVC II			
Over current protection	Auto recovery	≥ 110		% of Iout
Over voltage protection	3.3/5Vout, voltage clamp, hiccup		7.5	VDC
	9/12Vout, voltage clamp, hiccup		17	VDC
	15Vout, voltage clamp, hiccup		20	VDC
	24Vout, voltage clamp, hiccup		30	VDC
Short circuit protection	Hiccup, Continuous, Auto recovery			
Switching Frequency		65		KHz
Operating altitude			5000	m
Operating temperature	See derating graph	-40 to +85		°C
Storage temperature		-40 to +105		°C
Maximum case temperature			95	°C
Soldering temperature	5 seconds	260		°C
No-load power consumption	230VAC	0.1		W
Power Derating	+70 °C to +85 °C, 3.3Vout	2.33		%/°C
	+70 °C to +85 °C, others	1.33		%/°C
Temperature coefficient		±0.02		%/°C
Cooling	Free air convection			
Humidity	Non-condensing	≥ 10	95	% RH
Vibration	10Hz to 55Hz, 5G, 30 minutes along X, Y and Z axis			
Case material	Plastic (flammability to UL 94V-0)			
Weight	PCB mountable models	16		g
	With optional -ST mounting plate	36		g
	With optional -STD mounting plate	56		g
Dimensions (L x W x H)	PCB mountable models	1.00 x 1.00 x 0.59 inches (25.40 x 25.40 x 15.00 mm)		
	With optional -ST mounting plate	2.99 x 1.24 x 0.94 inches (76.00 x 31.50 x 23.80 mm)		
	With optional -STD mounting plate	2.99 x 1.24 x 1.12 inches (76.00 x 31.50 x 28.40 mm)		
MTBF	> 1 500 000 hrs (MIL-HDBK -217F, t=+25°C)			

NOTE: All specifications in this datasheet are measured at an ambient temperature of 25°C, humidity<75%, nominal input voltage and at rated output load unless otherwise specified.

Safety Specifications

Parameters		
Agency Approvals	UL 62368-1(Except for models with suffix "-ST" or "-STD")	
Standards	Designed to meet IEC/EN 62368-1, UKCA, EN 60335-1, EN 61558-1	
	EMC - Conducted and radiated emission	CISPR32 / EN55032, class B
	Electrostatic Discharge Immunity	IEC/EN61000-4-2 Contact ±6KV, Air ±8KV, Criteria B
	RF, Electromagnetic Field Immunity	IEC/EN61000-4-3 10V/m, Criteria A
	Electrical Fast Transient/Burst Immunity	IEC/EN61000-4-4 ±2KV, Criteria B ±4KV, Criteria B (with the recommended EMC circuit)
	Surge Immunity	IEC/EN61000-4-5 L-L ±1KV, Criteria B L-L ±2KV, Criteria B (with the recommended EMC circuit)
	RF, Conducted Disturbance Immunity	IEC/EN61000-4-6 10Vr.m.s, Criteria A
	Voltage dips, Short Interruptions Immunity	IEC/EN61000-4-11 0%, 70%, Criteria B

Derating

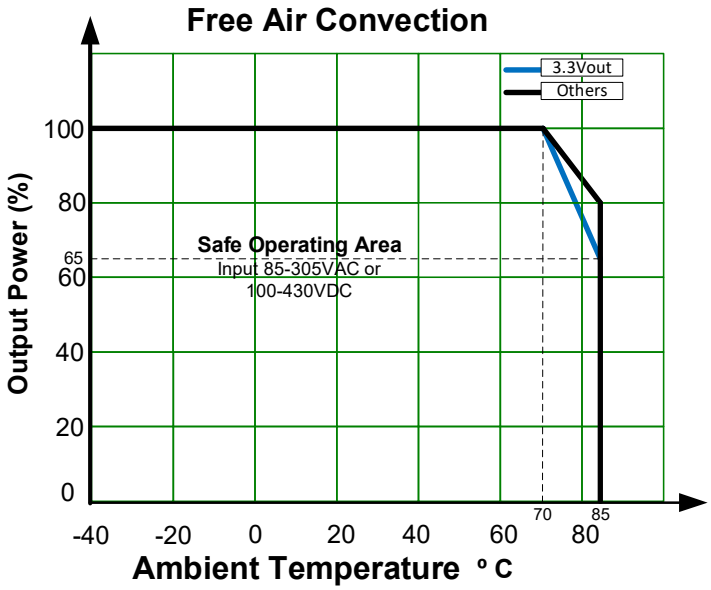

Typical Application Circuit

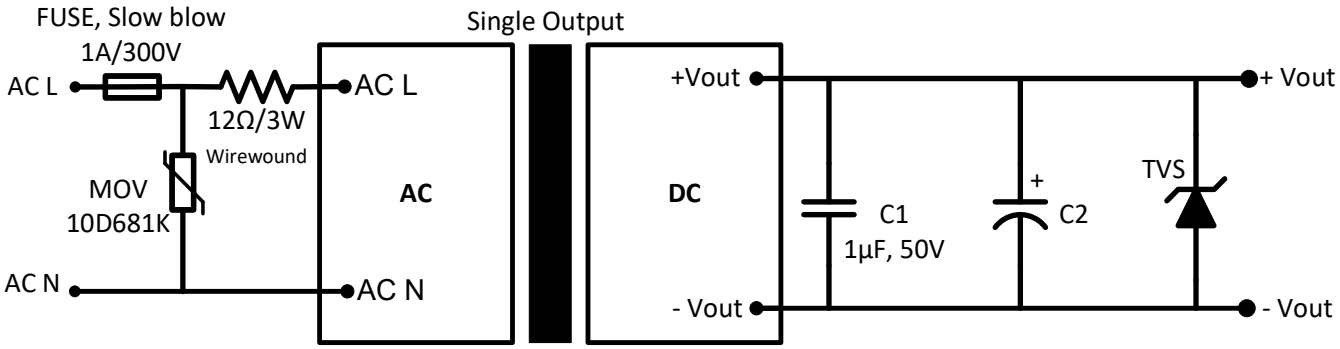

Model	C2	TVS
3.3, 5Vout	150µF, 16V	SMBJ7.0A
9Vout	120µF, 35V	SMBJ12A
12, 15Vout	120µF, 35V	SMBJ20A
24Vout	68µF, 35V	SMBJ30A

For filtering components:
The input fuse is recommended to use slow blow type.
Choose capacitors with at least 20% voltage margin.
The C2 capacitor is recommended to use electrolytic type with high frequency and low ESR rating.
The C1 capacitor is recommended to use ceramic type for filtering high-frequency noise.

Recommended EMC Circuit

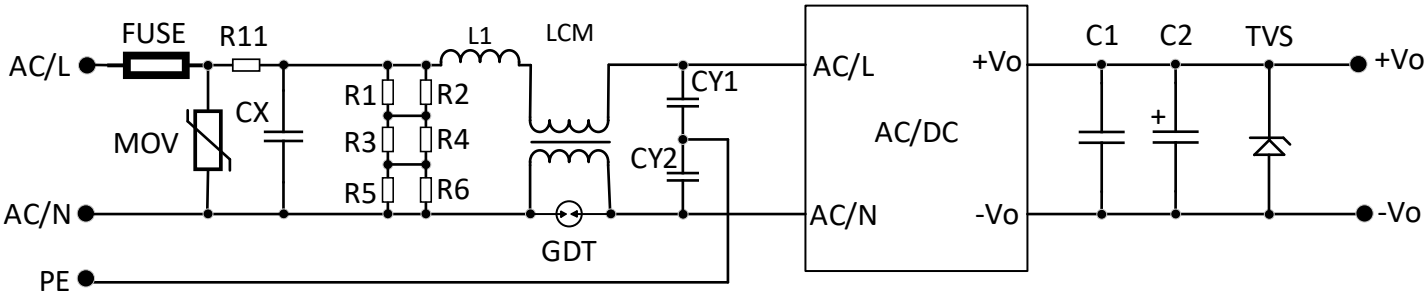

MOV	CX	R11	L1	LCM	GDT	CY1, CY2
14D681K	334K, 305VAC	33 Ohm, 3W	1.2mH, 0.3A	20mH	300V, 1KA	1nF, 400VAC

*FUSE to be 2A, 300V, slow blow.
*R1 … R6 is the bleeder resistance of CX – 1.5Mohm, 150VDC
*Other components see the Typical Application Circuit above

Dimensions

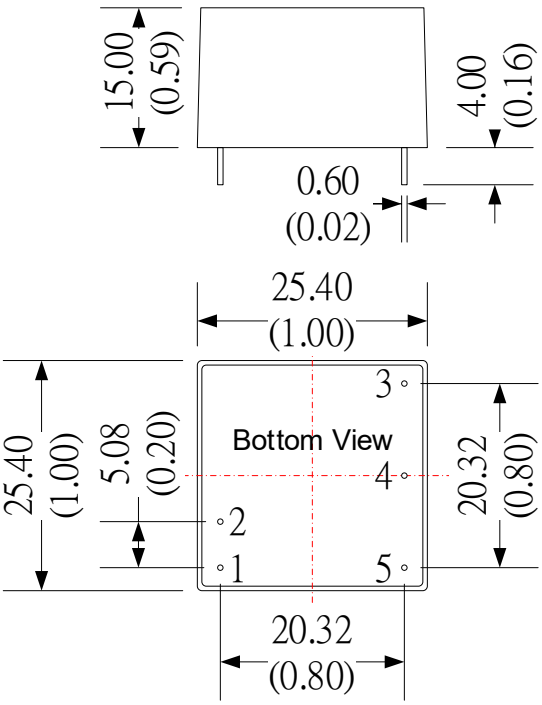

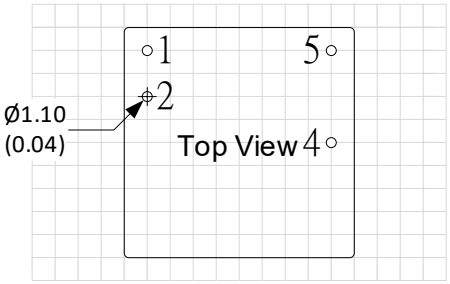

Grid size: 2.54*2.54mm

Pin Output Specifications	
Pin	Function
1	AC Input (N)
2	AC Input (L)
3	No Pin
4	-V Output
5	+V Output

Note:
Unit: mm(inch)
General tolerance: ±1.00 (±0.04)
Pin distance tolerance: ±0.5 (±0.02)
Pin diameter tolerance: ±0.15 (±0.006)

Dimensions with ST Optional

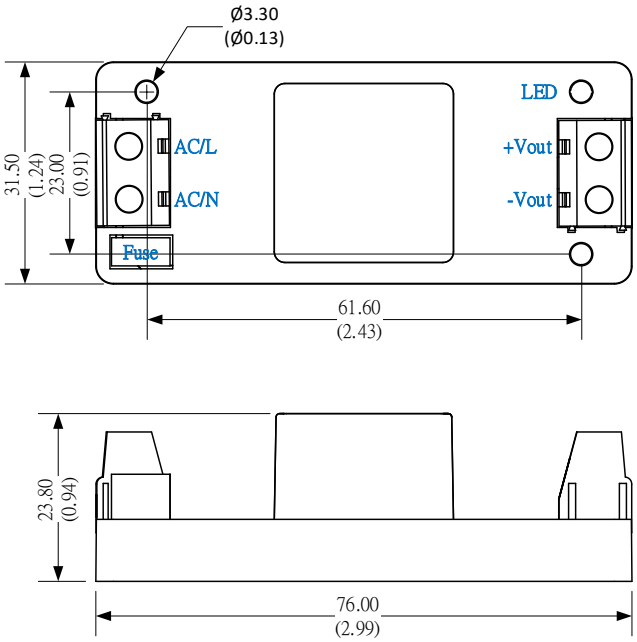

Unit: mm(inch)
General tolerance: ±1.00(±0.04)
Tightening torque: 0.4 Nm Max.
Wire gauge : 12~24 AWG

Dimensions with STD Optional

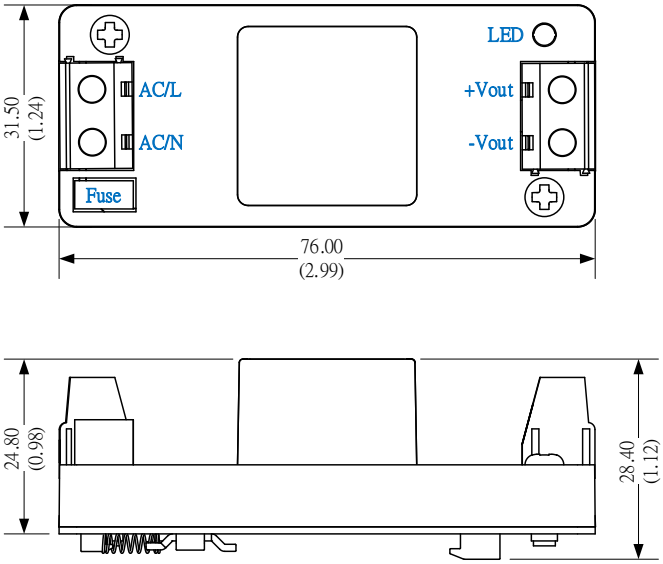

Unit: mm(inch)
General tolerance: ±1.00(±0.04)
Tightening torque: 0.4 Nm Max.
Wire gauge : 12~24 AWG

NOTE: 1. Datasheets are updated as needed and as such, specifications are subject to change without notice. Once printed or downloaded, datasheets are no longer controlled by Aimtec; refer to www.aimtec.com for the most current product specifications. **2.** Product labels shown, including safety agency certifications on labels, may vary based on the date manufactured. **3.** Mechanical drawings and specifications are for reference only. **4.** All specifications are measured at an ambient temperature of 25°C, humidity<75%, nominal input voltage and at rated output load unless otherwise specified. **5.** Aimtec may not have conducted destructive testing or chemical analysis on all internal components and chemicals at the time of publishing this document. CAS numbers and other limited information are considered proprietary and may not be available for release. **6.** This product is not designed for use in critical life support systems, equipment used in hazardous environments, nuclear control systems or other such applications which necessitate specific safety and regulatory standards other the ones listed in this datasheet. **7.** Warranty is in accordance with Aimtec's standard Terms of Sale available at www.aimtec.com.