Click to ORDER samples

AMEL30-277HAVZ



Encapsulated

The AMEL30-277HAVZ series is an efficient 30W AC-DC power supply module. Offering a commercial input voltage range of 85-305VAC, output voltage ranges from 3.3-48V, low power consumption up to 0.1W, high efficiency, high reliability and safer isolation.

This new series offers great operating temperatures, from -40°C to 85°C with full power up to 50°C and features an isolation of 4200VAC with OVCIII rating (based on EN62368-1) for improved reliability and system safety. Furthermore, a high MTBF of 1, 500,000h, output short circuit protection (OSCP), output over-current protection (OCP) and an output over-voltage protection (OVP) come standard with the series.

The AMEL30-277HAVZ is suitable for grid power, industrial instrumentation and controls, communication, and civil applications.

Features

- Universal Input: 85 - 305VAC/100 - 430VDC
- Operating Temp: -40 °C to +85 °C
- High isolation voltage: 4200VAC
- Low ripple & noise, 150mV(p-p), max.
- Output short circuit, over-current, over-voltage protection
- Low no-load power consumption of 0.1W
- Efficiency up to 90%
- Agency approvals: EN/UL62368-1, EN60335-1, EN61558-1
- Designed to meet IEC62368-1

Summary

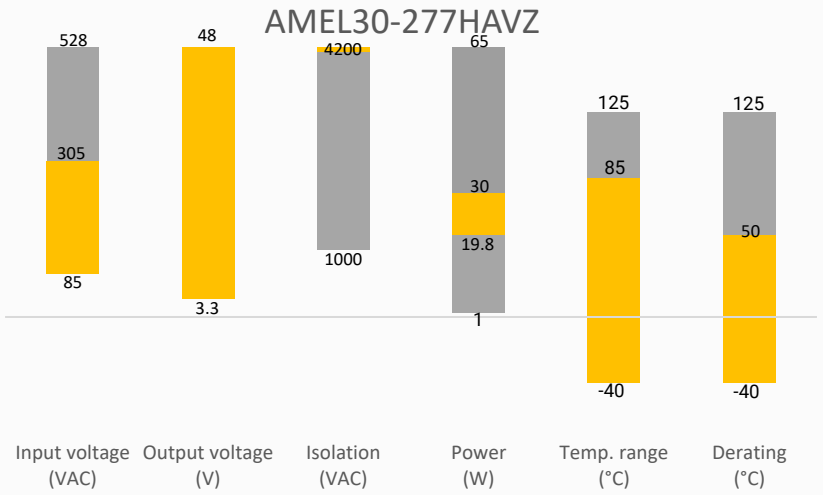

Training



Product Training Video (click to open)

Press Release

Coming Soon!

Application Notes

Applications

Power Grid

Industrial

Telecom

Models & Specifications

Single Output

Model	Input Voltage (VAC/Hz)	Input Voltage (VDC)	Max Output wattage (W)	Output Voltage (V)	Output Current max (A)	Maximum capacitive load (µF)	Efficiency @ 230VAC Typ. (%)
AMEL30-3S277HAVZ	85-305/47-63	100-430	19.8	3.3	6	6600	85
AMEL30-5S277HAVZ	85-305/47-63	100-430	30	5	6	6600	86
AMEL30-9S277HAVZ	85-305/47-63	100-430	30.6	9	3.4	4400	88
AMEL30-12S277HAVZ	85-305/47-63	100-430	30	12	2.5	4400	90
AMEL30-15S277HAVZ	85-305/47-63	100-430	30	15	2	3300	90
AMEL30-24S277HAVZ	85-305/47-63	100-430	31.2	24	1.3	1000	88
AMEL30-48S277HAVZ	85-305/47-63	100-430	30	48	0.625	470	90

Note: Add suffix "-ST" for optional screw terminal bottom plate or "-STD" for optional DIN rail screw terminal bottom plate. Models with terminal bottom plates have their efficiency decreased by 2%.

Input Specifications

Parameters	Conditions	Typical	Maximum	Units
Input current	115VAC		750	mA
	230VAC		500	mA
Inrush current	115VAC	20		A
	230VAC	50		A
Leakage	277VAC, 50Hz		0.1	mA RMS
Fuse	2A/300V, Slow blow, built-in			
Input filter	Built-in EMC filter			

Output Specifications

Parameters	Conditions	Typical	Maximum	Units
Voltage accuracy	3.3V output model	±3		%
	Others	±2		%
Line regulation	Full load	±0.5		%
Load regulation	0 to 100% load, 3.3V output	±2		%
	0 to 100% load, 5V output	±1.5		%
	0 to 100% load, Others	±1		%
Ripple & Noise*	20MHz bandwidth, 24V/48V		150	mV p-p
	20MHz bandwidth, others		100	mV p-p
Start-up time	100VAC	3		S
Hold up time	115VAC	10		ms
	230VAC	50		ms

* Ripple and Noise are measured at 20MHz bandwidth with a 47µF electrolytic capacitor and a 0.1µF ceramic capacitor. Please refer to the application note for specific details.

Isolation Specification

Parameters	Conditions	Typical	Maximum	Units
Tested I/O voltage	60 sec, leakage ≤ 5mA	4200		VAC
Resistance	500VDC	>100		MΩ

General Specifications

Parameters	Conditions	Typical	Maximum	Units
Protection class	Class II			
Overvoltage category	OVC III according to EN62368-1			
Over current protection	Auto recovery	≥ 110		% of Iout
Over voltage protection	3.3Vout, voltage clamp, hiccup		6.3	VDC
	5V, 9V, 12Vout, voltage clamp, hiccup		16	VDC
	15Vout, voltage clamp, hiccup		25	VDC
	24Vout, voltage clamp, hiccup		35	VDC
	48Vout, voltage clamp, hiccup		60	VDC
Short circuit protection	Hiccup, Continuous, Auto recovery			
Switching Frequency		65		KHz
Operating altitude			5000	m
Operating temperature	See derating graph	-40 to +85		°C
Storage temperature		-40 to +105		°C
Soldering temperature	5 seconds	260		°C
No-load power consumption	230VAC, 24/48Vout	0.15	0.2	W
	230VAC, others	0.1	0.12	W
Power Derating	-40 °C to -25 °C, 85VAC to 115VAC, 5V output	2.67		%/°C
	-40 °C to -25 °C, 85VAC to 115VAC, Others	1.33		%/°C
	+50 °C to +70 °C	2.5		%/°C
	+70 °C to +85 °C	0.67		%/°C
	85VAC to 100VAC	1.33		%/VAC
	277VAC to 305VAC	0.72		%/VAC
	2000 - 5000m	6.7		%/km
Temperature coefficient		±0.02		%/°C
Cooling	Free air convection			
Humidity	Non-condensing		95	% RH
Vibration	10-55Hz, 5G, 30 minutes, along all axis			
Case material	Plastic (flammability to UL 94V-0)			
Weight	PCB mountable models	100		g
	With optional -ST mounting plate	148		g
	With optional -STD mounting plate	190		g
Dimensions (L x W x H)	PCB mountable models	2.74 x 1.54 x 0.95 inches (69.50 x 39.00 x 24.00 mm)		
	With optional -ST mounting plate	3.78 x 2.13 x 1.28 inches (96.00 x 54.00 x 32.50 mm)		
	With optional -STD mounting plate	3.78 x 2.13 x 1.46 inches (96.00 x 54.00 x 37.10 mm)		
MTBF	> 1 500 000 hrs (MIL-HDBK -217F, t=+25°C)			

NOTE: All specifications in this datasheet are measured at an ambient temperature of 25°C, humidity<75%, nominal input voltage and at rated output load unless otherwise specified.

Safety Specifications		
Parameters		
Agency Approvals	UL/EN 62368-1, UKCA, EN 60335-1, EN 61558-1	
Standards	Designed to meet IEC 62368-1	
	EMC - Conducted and radiated emission	CISPR32 / EN55032, class B
	Electrostatic Discharge Immunity	IEC/EN61000-4-2 Contact ±6KV, Air ±8KV, Criteria B
	RF, Electromagnetic Field Immunity	IEC/EN61000-4-3 10V/m, Criteria A
	Electrical Fast Transient/Burst Immunity	IEC/EN61000-4-4 ±2KV, Criteria B ±4KV, Criteria B (with the recommended EMC circuit)
	Surge Immunity	IEC/EN61000-4-5 L-L ±2KV, Criteria B L-G ±4KV, Criteria B (with the recommended EMC circuit)
	RF, Conducted Disturbance Immunity	IEC/EN61000-4-6 10Vr.m.s, Criteria A
	Voltage dips, Short Interruptions Immunity	IEC/EN61000-4-11 0%, 70%, Criteria B

Derating

Thermal derating for 5V output model

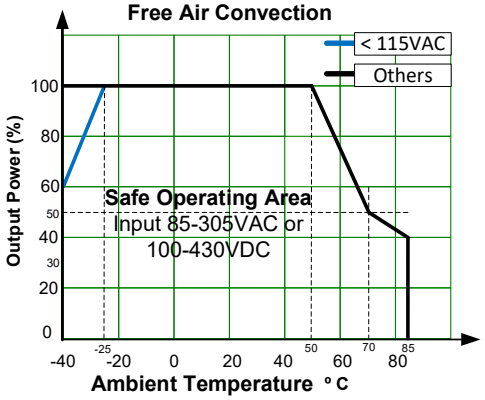

Thermal derating for other models

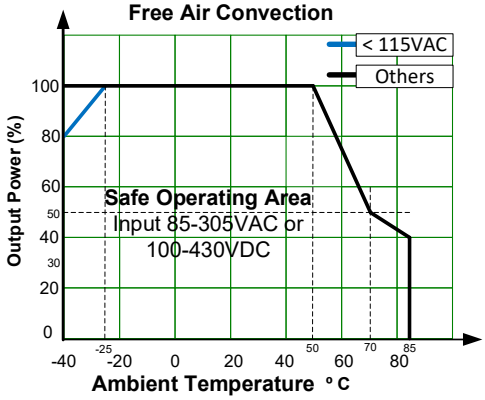

Altitude derating for all models

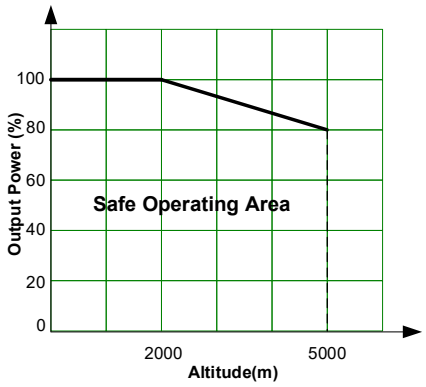

Input derating

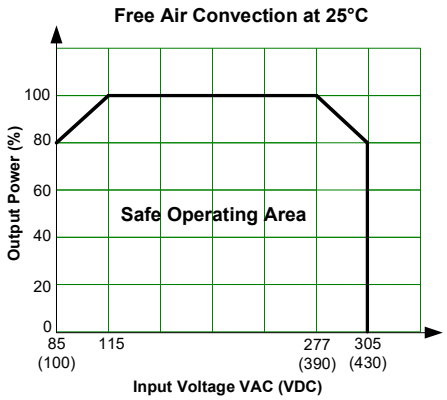

Typical Application Circuit

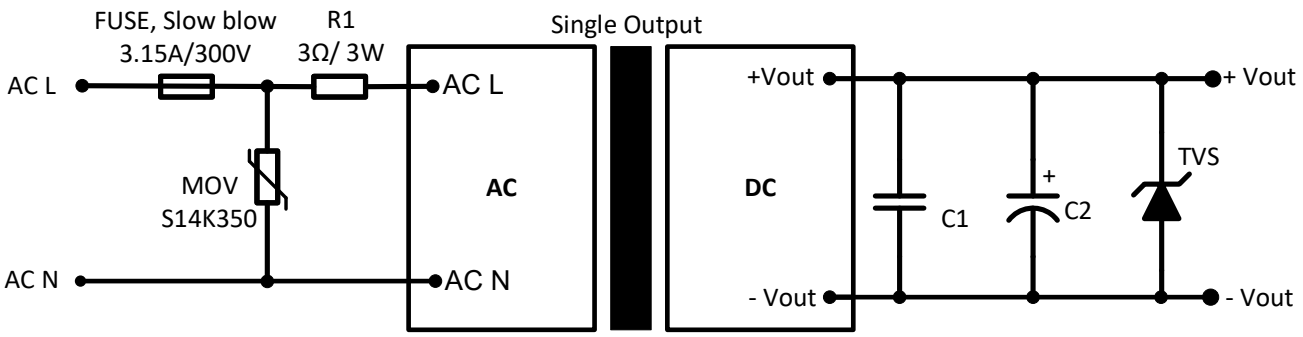

Model	C1	C2	TVS
3.3, 5Vout	1μF/50V	10μF/35V	7V
9Vout	1μF/50V	10μF/35V	12V
12, 15Vout	1μF/50V	10μF/35V	20V
24Vout	1μF/50V	10μF/35V	30V
48Vout	1μF/100V	10μF/63V	64V

For filtering components:
The C2 capacitor is recommended to use electrolytic type with high frequency and low ESR rating.
The C1 capacitor is recommended to use ceramic type for filtering high-frequency noise.

Recommended EMC Circuit

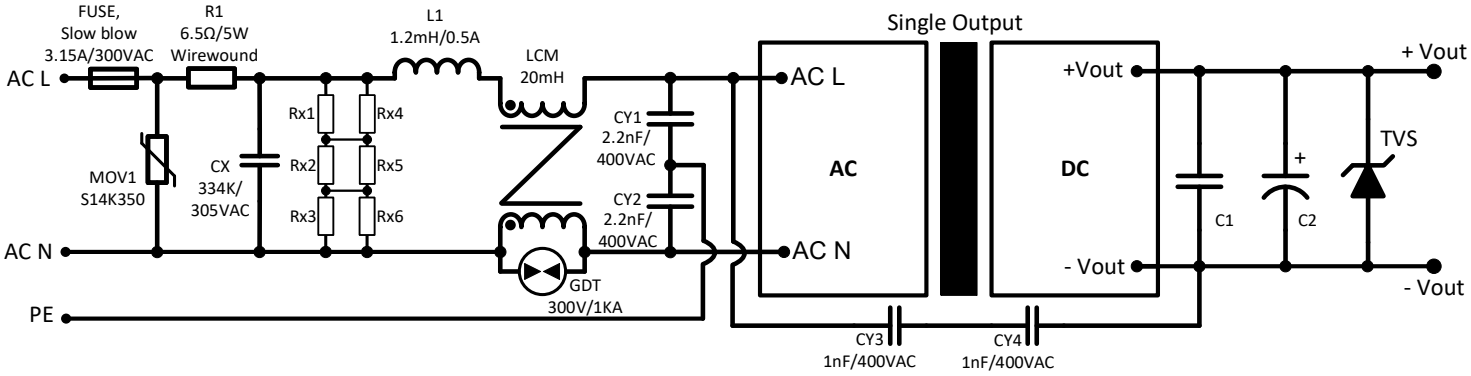

Rx1, Rx2, Rx3, Rx4, Rx5, Rx6
1.5MΩ/150VDC/1206

Dimensions

No Suffix

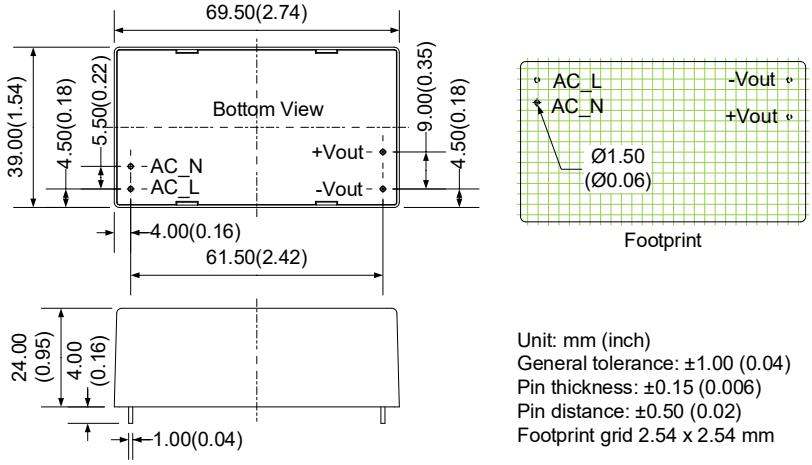

Unit: mm (inch)
General tolerance: ±1.00 (0.04)
Pin thickness: ±0.15 (0.006)
Pin distance: ±0.50 (0.02)
Footprint grid 2.54 x 2.54 mm

Suffix ***"-ST"*** for optional chassis

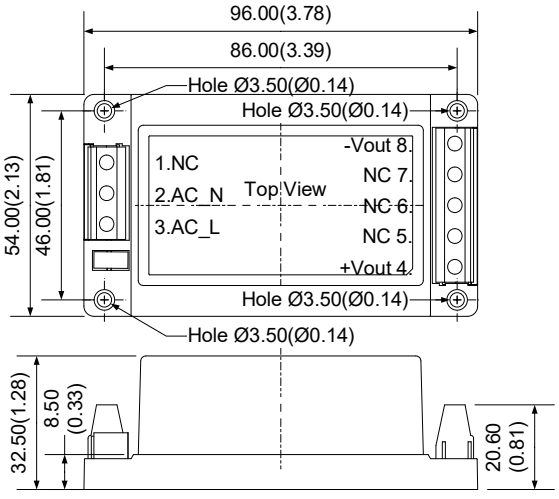

Suffix ***"-STD"*** for optional DIN Rail

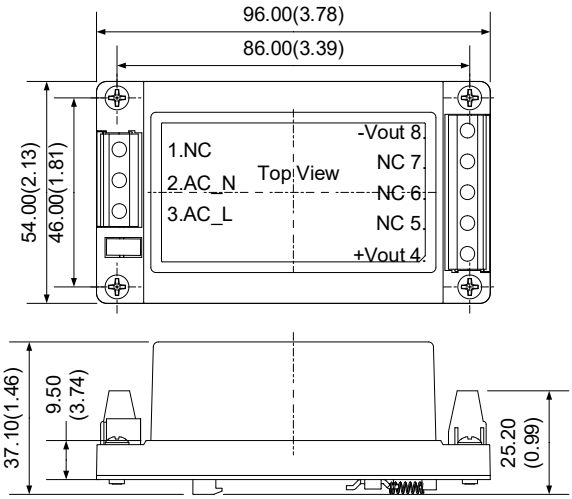

Unit: mm (inch)
General tolerance: ±1.00 (0.04)
Tightening torque: 0.4 Nm Max.
Wire gauge to chassis:12~24 AWG

NOTE: 1. Datasheets are updated as needed and as such, specifications are subject to change without notice. Once printed or downloaded, datasheets are no longer controlled by Aimtec; refer to www.aimtec.com for the most current product specifications. **2.** Product labels shown, including safety agency certifications on labels, may vary based on the date manufactured. **3.** Mechanical drawings and specifications are for reference only. **4.** All specifications are measured at an ambient temperature of 25°C, humidity<75%, nominal input voltage and at rated output load unless otherwise specified. **5.** Aimtec may not have conducted destructive testing or chemical analysis on all internal components and chemicals at the time of publishing this document. CAS numbers and other limited information are considered proprietary and may not be available for release. **6.** This product is not designed for use in critical life support systems, equipment used in hazardous environments, nuclear control systems or other such applications which necessitate specific safety and regulatory standards other the ones listed in this datasheet. **7.** Warranty is in accordance with Aimtec's standard Terms of Sale available at www.aimtec.com.