Click to ORDER samples

AMEL20-277HAVZ



Encapsulated

The AMEL20-277HAVZ series is an efficient 20W AC-DC power supply module. Offering a commercial input voltage range of 85-305VAC, output voltage ranges from 3.3-24V, low power consumption, high efficiency, high reliability and safer isolation.

This new series offers great operating temperatures, from -40°C to 85°C with full power up to 50°C and features an isolation of 4000VAC with OVC III for improved reliability and system safety. Furthermore, a high MTBF of 1,500,000h, output short circuit protection (OSCP), output over-current protection (OCP) and an output over-voltage protection (OVP) come standard with the series.

The AMEL20-277HAVZ is suitable for grid power, industrial instrumentation and controls, communication, and civil applications.

Features

- Universal Input: 85 - 305VAC/100 - 430VDC
- Operating Temp: -40 °C to +85 °C
- High isolation voltage: 4000VAC
- Low ripple & noise, 150mV(p-p), max.
- Output short circuit, over-current, over-voltage protection
- Low no-load power consumption of 0.1W
- Efficiency up to 87%
- Agency approvals: IEC/EN/UL62368-1, EN60335, EN61558

RoHS 3yr Warranty CE cULus UKCA

Summary

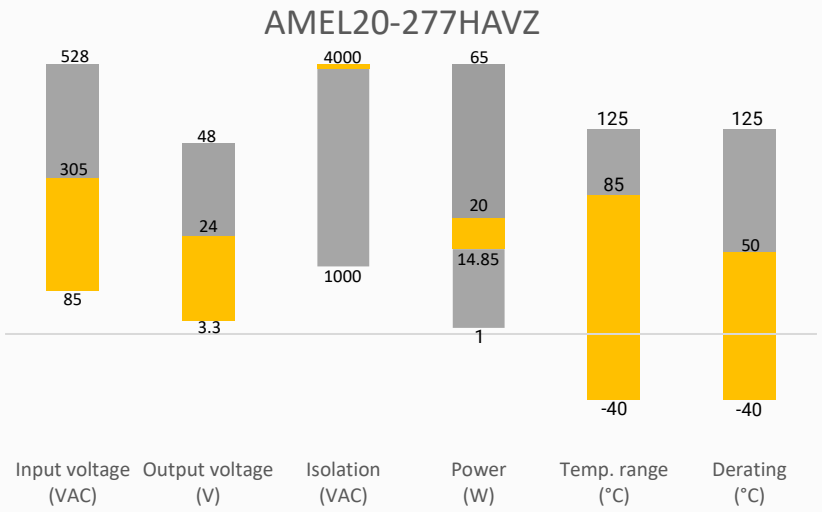

Training



Product Training Video (click to open)

Press Release

Application Notes

Coming Soon!

Applications

Power Grid

Industrial

Telecom

Instrumentation

Models & Specifications

Single Output

Model	Input Voltage (VAC/Hz)	Input Voltage (VDC)	Max Output wattage (W)	Output Voltage (V)	Output Current max (A)	Maximum capacitive load (µF)	Efficiency @ 230VAC Typ. (%)
AMEL20-3S277HAVZ	85-305/47-63	100-430	14.85	3.3	4.5	8000	81
AMEL20-5S277HAVZ	85-305/47-63	100-430	20	5	4	8000	85
AMEL20-9S277HAVZ	85-305/47-63	100-430	20	9	2.2	3500	85
AMEL20-12S277HAVZ	85-305/47-63	100-430	20	12	1.67	2500	86
AMEL20-15S277HAVZ	85-305/47-63	100-430	20	15	1.33	2200	87
AMEL20-24S277HAVZ	85-305/47-63	100-430	20	24	0.83	820	87

Note : Add suffix "-ST" for optional screw terminal bottom plate (ex. AMEL20-3S277HAVZ-ST) or "-STD" for optional DIN rail screw terminal bottom plate (ex. AMEL20-3S277HAVZ-STD). Models with terminal bottom plates have their efficiency decreased by 2%.

Input Specifications

Parameters	Conditions	Typical	Maximum	Units
Input current	115VAC		500	mA
	230VAC		300	mA
Inrush current	115VAC	20		A
	230VAC	45		A
Leakage	277VAC, 50Hz		0.1	mA RMS
Fuse	2A/300V, Slow blow, built-in			
Input filter	Built-in EMC filter			

Output Specifications

Parameters	Conditions	Typical	Maximum	Units
Voltage accuracy		±3		%
Line regulation	Full load	±0.5		%
Load regulation	0-100% load	±1		%
Ripple & Noise*	20MHz bandwidth	100	150	mV p-p
Hold up time	115VAC	10		ms
	230VAC	50		ms

* Ripple and Noise are measured at 20MHz bandwidth with a 47µF electrolytic capacitor and a 0.1µF ceramic capacitor. Please refer to the application note for specific details.

Isolation Specification

Parameters	Conditions	Typical	Maximum	Units
Tested I/O voltage	60 sec, leakage ≤ 5mA	4000		VAC
Resistance	500VDC	>100		MΩ

General Specifications

Parameters	Conditions	Typical	Maximum	Units
Protection class	Class II			
Overvoltage category	OVC III			
Pollution degree	PD3			
Over current protection	Auto recovery	≥ 110		% of Iout
Over voltage protection	3.3, 5Vout, voltage clamp, hiccup		7.5	VDC
	9Vout, voltage clamp, hiccup		15	VDC
	12, 15Vout, voltage clamp, hiccup		20	VDC
	24Vout, voltage clamp, hiccup		30	VDC
Short circuit protection	Hiccup, Continuous, Auto recovery			
Switching Frequency		65		KHz
Operating altitude			5000	m
Operating temperature	See derating graph	-40 to +85		°C
Storage temperature		-40 to +105		°C
Maximum case temperature			95	°C
Reflow soldering temperature	Duration 5s	260		°C
No-load power consumption		0.1		W
Power Derating	-40 °C to -25 °C, 85VAC to 165VAC	2.0		%/°C
	+50 °C to +70 °C, 3.3/5/9Vout	2.5		%/°C
	+55 °C to +70 °C, 12/15/24Vout	3.33		%/°C
	+70 °C to +85 °C	1.33		%/°C
	85VAC to 100VAC	2.0		%/VAC
	277VAC to 305VAC	0.71		%/VAC
	2000 - 5000m	6.7		%/km
Temperature coefficient		±0.02		%/°C
Cooling	Free air convection			
Humidity	Non-condensing	>10	95	% RH
Vibration	10Hz to 55Hz, 5G, 30 minutes along X, Y and Z axis			
Case material	Plastic (flammability to UL 94V-0)			
Weight	PCB mountable models	55		g
	With optional -ST mounting plate	75		g
	With optional -STD mounting plate	95		g
Dimensions (L x W x H)	PCB mountable models	2.06 x 1.07 x 0.94 inches (52.40 x 27.20 x 24.00 mm)		
	With optional -ST mounting plate	2.99 x 1.24 x 1.29 inches (76.00 x 31.50 x 32.80 mm)		
	With optional -STD mounting plate	2.99 x 1.24 x 1.47 inches (76.00 x 31.50 x 37.40 mm)		
MTBF	> 1 500 000 hrs (MIL-HDBK -217F, t=+25°C)			

NOTE: All specifications in this datasheet are measured at an ambient temperature of 25°C, humidity<75%, nominal input voltage and at rated output load unless otherwise specified.

Safety Specifications

Parameters		
Agency Approvals	UL 62368-1(Except for models with suffix “-ST” or “-STD”)	
Standards	Designed to meet EN/IEC/UL 62368-1, UKCA, EN60335-1, EN61558-1	
	EMC - Conducted and radiated emission	CISPR32 / EN55032, class B
	Electrostatic Discharge Immunity	IEC/EN61000-4-2 Contact ±6KV, Air ±8KV, Criteria B
	RF, Electromagnetic Field Immunity	IEC/EN61000-4-3 10V/m, Criteria A
	Electrical Fast Transient/Burst Immunity	IEC/EN61000-4-4 ±2KV, Criteria B ±4KV, Criteria B (with the recommended EMC circuit)
	Surge Immunity	IEC/EN61000-4-5 L-L ±1KV, Criteria B L-L ±2KV, Criteria B (with the recommended EMC circuit)
	RF, Conducted Disturbance Immunity	IEC/EN61000-4-6 10Vr.m.s, Criteria A
	Voltage dips, Short Interruptions Immunity	IEC/EN61000-4-11 0%, 70%, Criteria B

Recommended EMC Circuit

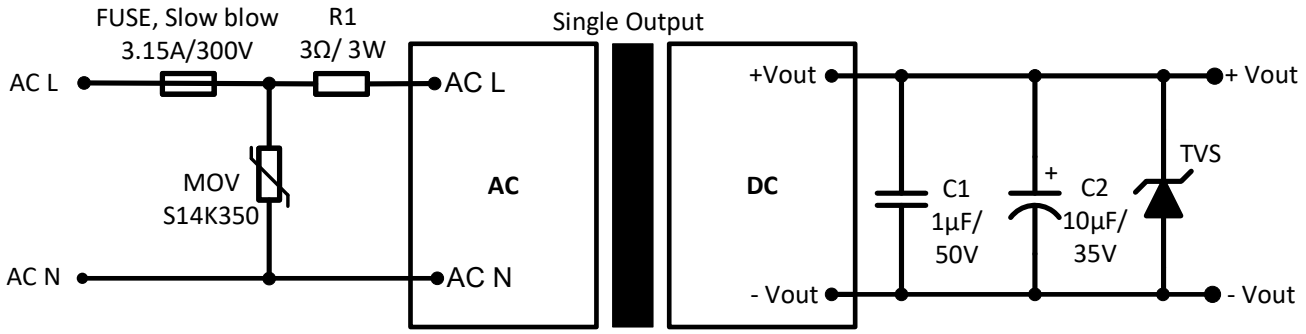

Model	TVS
3.3, 5Vout	SMBJ7.0A
9Vout	SMBJ12A
12, 15Vout	SMBJ20A
24Vout	SMBJ30A

For filtering components:
The C2 capacitor is recommended to use electrolytic type with high frequency and low ESR rating.
The C1 capacitor is recommended to use ceramic type for filtering high-frequency noise.

Derating

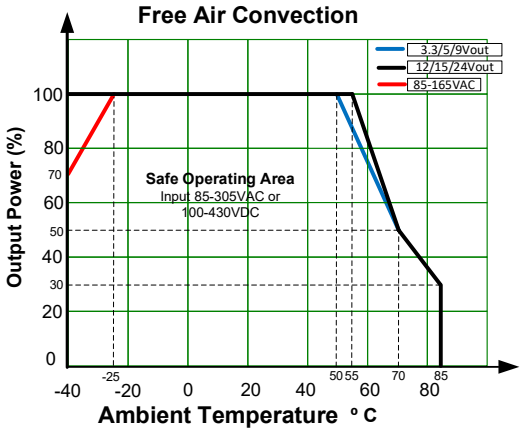

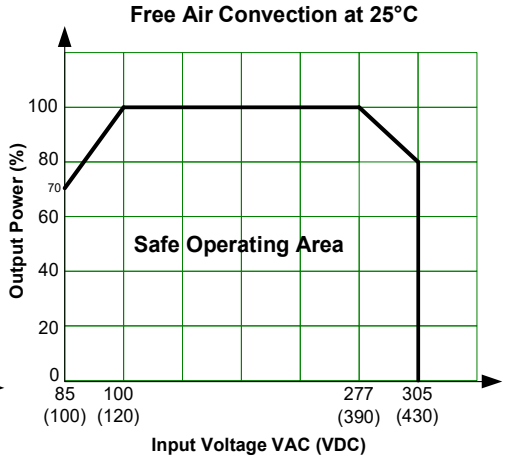

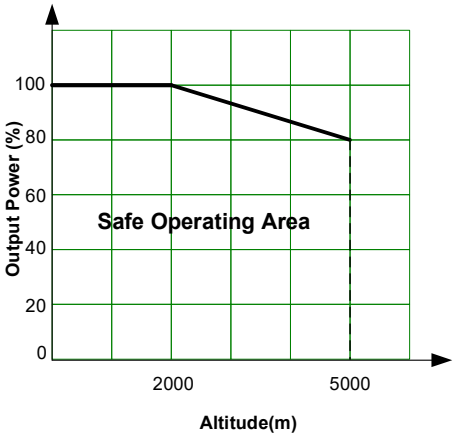

Dimensions

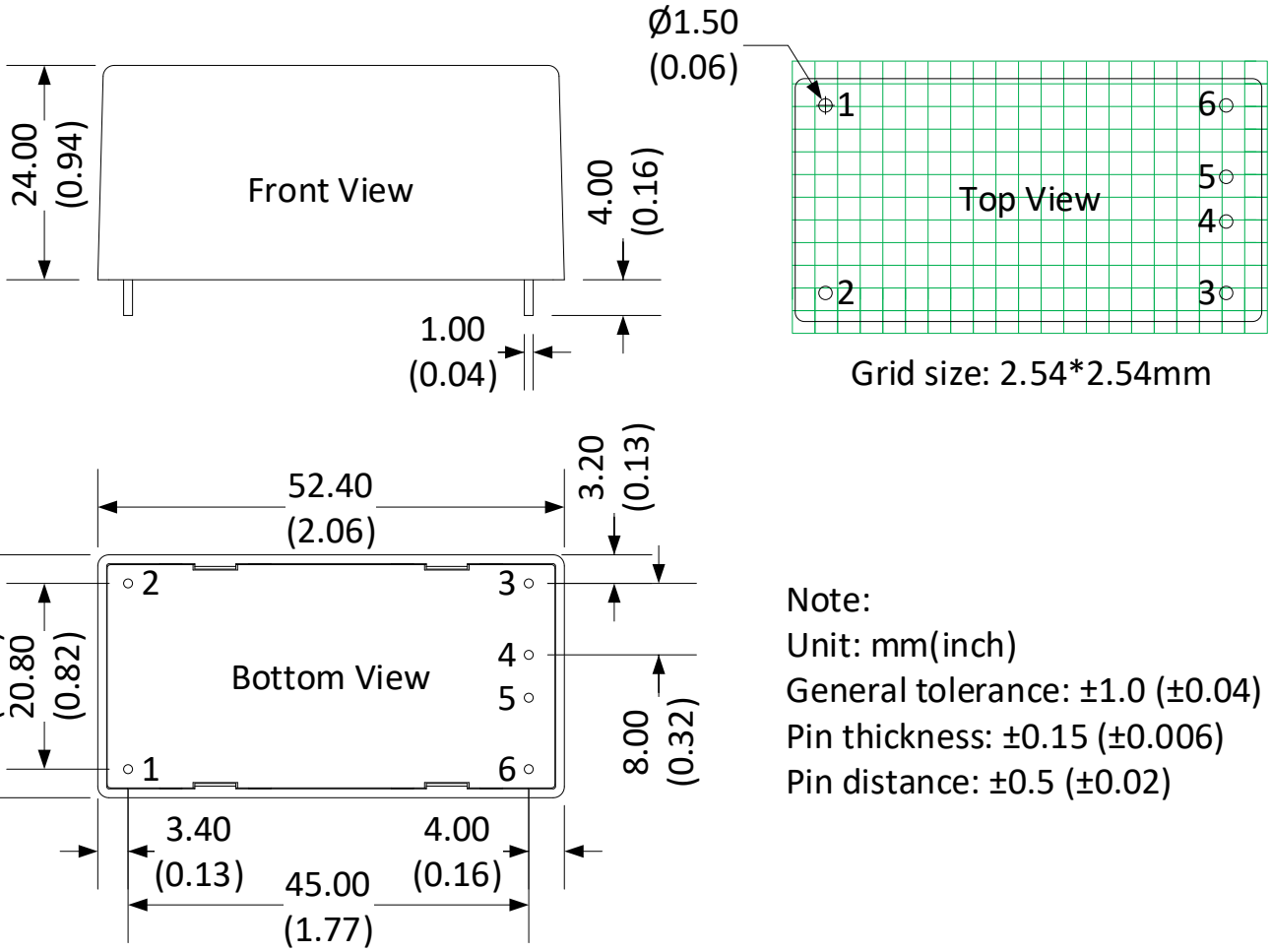

Note:
Unit: mm(inch)
General tolerance: ±1.0 (±0.04)
Pin thickness: ±0.15 (±0.006)
Pin distance: ±0.5 (±0.02)

Pin Output Specifications	
Pin	Function
1	AC Input (L)
2	AC Input (N)
3	-V Output
4	+V Output
5	No Pin
6	No Pin

Dimensions with ST Optional

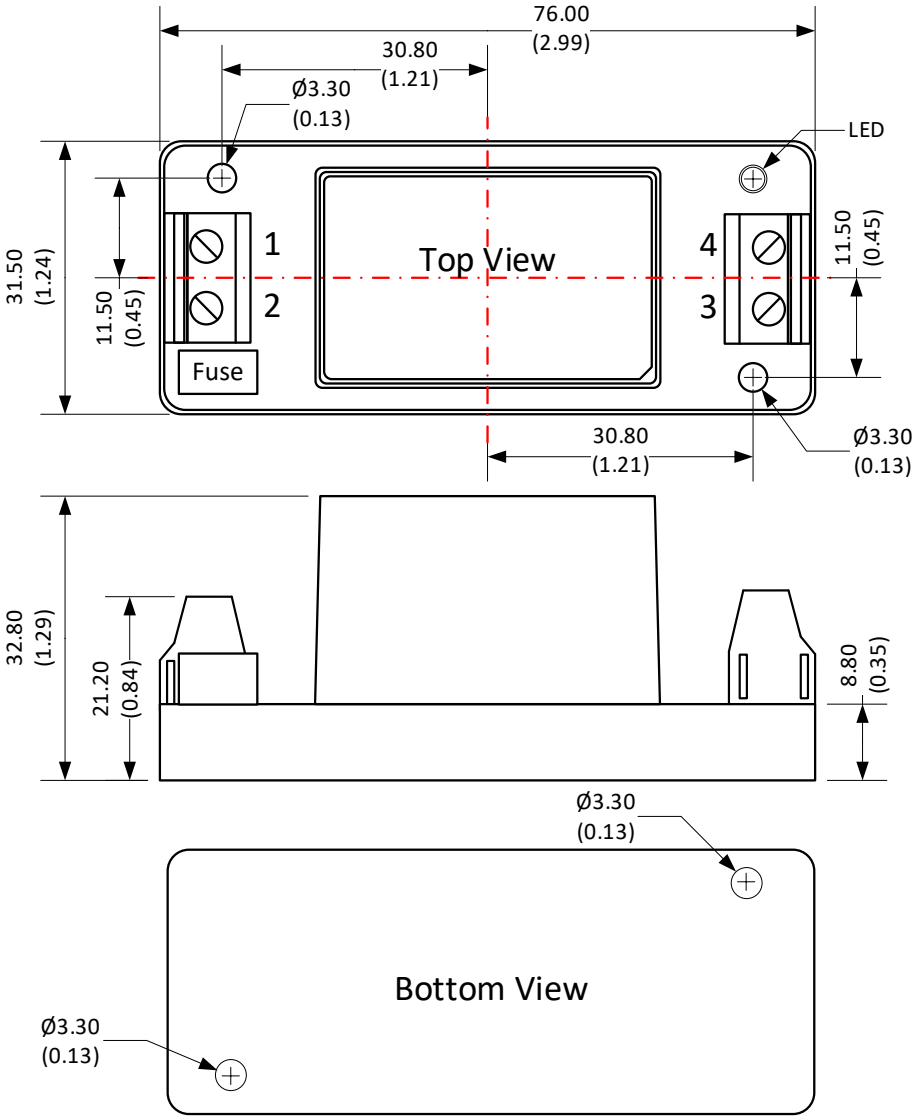

Pin Output Specifications	
Pin	Function
1	AC Input (L)
2	AC Input (N)
3	-V Output
4	+V Output

Note:
Unit: mm(inch)
Wire range : 12-24 AWG
Tightening torque : Max 0.4 N.m
General tolerance ±1.00 (±0.04)

Dimensions with STD Optional

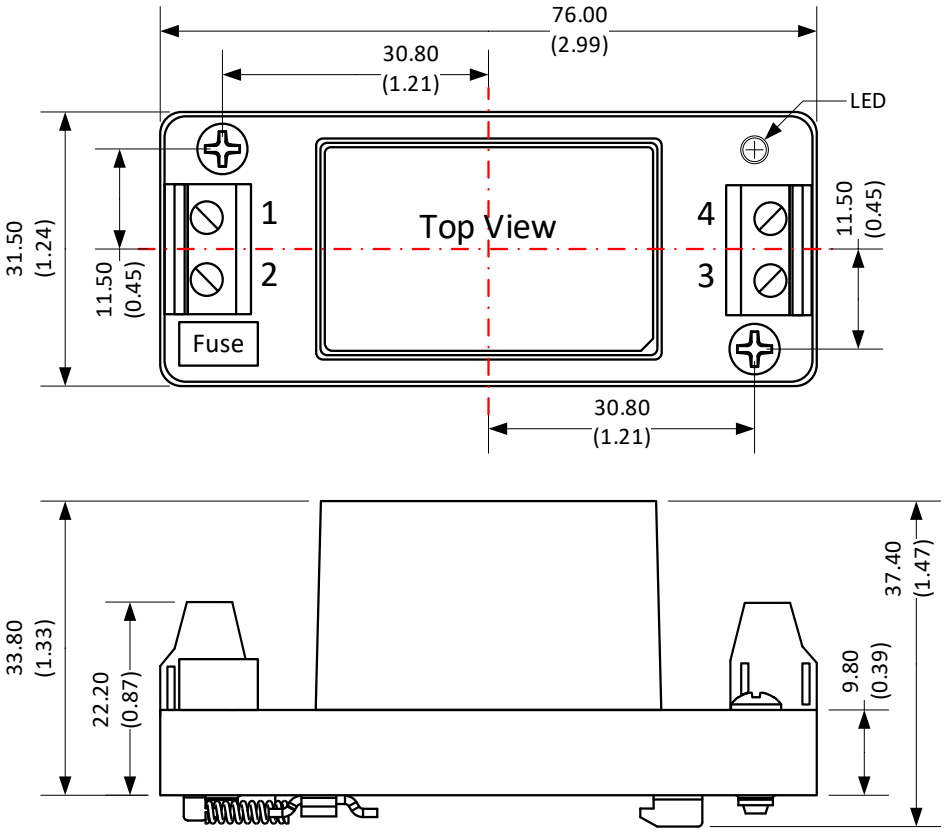

Pin Output Specifications	
Pin	Function
1	AC Input (L)
2	AC Input (N)
3	-V Output
4	+V Output

Note:
Unit: mm(inch)
Wire range : 12-24 AWG
Tightening torque : Max 0.4 N.m
General tolerance ±1.00 (±0.04)
Mounting rail must be grounded.

NOTE: 1. Datasheets are updated as needed and as such, specifications are subject to change without notice. Once printed or downloaded, datasheets are no longer controlled by Aimtec; refer to www.aimtec.com for the most current product specifications. **2.** Product labels shown, including safety agency certifications on labels, may vary based on the date manufactured. **3.** Mechanical drawings and specifications are for reference only. **4.** All specifications are measured at an ambient temperature of 25°C, humidity<75%, nominal input voltage and at rated output load unless otherwise specified. **5.** Aimtec may not have conducted destructive testing or chemical analysis on all internal components and chemicals at the time of publishing this document. CAS numbers and other limited information are considered proprietary and may not be available for release. **6.** This product is not designed for use in critical life support systems, equipment used in hazardous environments, nuclear control systems or other such applications which necessitate specific safety and regulatory standards other the ones listed in this datasheet. **7.** Warranty is in accordance with Aimtec's standard Terms of Sale available at www.aimtec.com.