Click to ORDER samples

AMEL15S-277HAGY



Encapsulated

The AMEL15S-277HAGY series is an efficient 15W AC-DC power supply module. Offering a commercial input voltage range of 85-305VAC, output voltage ranges from 3.3-24V, low power consumption, high efficiency and high reliability.

This new series offers great operating temperatures, from -40°C to 85°C with full power from -40°C to 50°C and features an isolation of 4000VAC for improved reliability and system safety. Furthermore, a high MTBF of 300,000h, output short circuit protection (OSCP), output over-current protection (OCP) and an output over-voltage protection (OVP) come standard with the series.

The AMEL15S-277HAGY is suitable for grid power, instrumentation, industrial controls, communication, and civil applications.

Features

- Universal Input: 85 - 305VAC/100 - 430VDC
- Operating Temp: -40 °C to +85 °C
- High isolation voltage: 4000VAC
- Low ripple & noise, 120mVp-p (typ.)
- Output short circuit, over-current, over-voltage protection
- Regulated Output
- Efficiency up to 86%
- Agency approvals : UL62368-1
- Design references : IEC/EN/BS EN 62368-1, EN60335-1, EN61558-1, IEC/EN60601-1, ANSI/AAMI ES60601-1

Summary

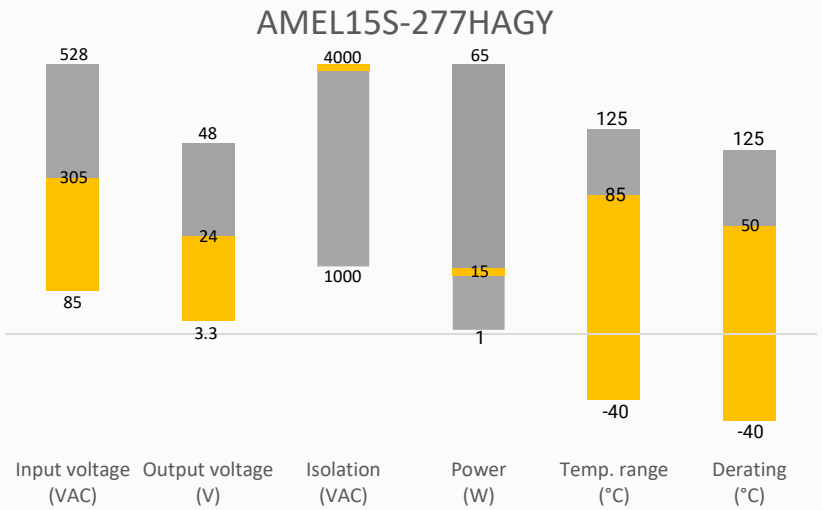

Training

Product Training Video (click to open)

Press Release

Coming Soon!

Application Notes

Applications

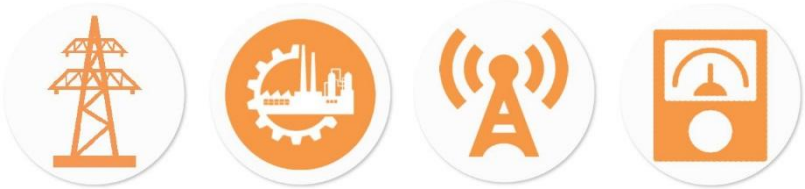

Power Grid | Industrial | Telecom | Instrumentation

Models & Specifications

Single Output							
Model	Input Voltage (VAC/Hz)	Input Voltage (VDC)	Max Output wattage (W)	Output Voltage (V)	Output Current max (A)	Maximum capacitive load (µF)	Efficiency @ 230VAC Typ. (%)
AMEL15S-3S277HAGY	85-305/47-63	100-430	13.2	3.3	4	6600	82
AMEL15S-5S277HAGY	85-305/47-63	100-430	15	5	3	5000	85
AMEL15S-9S277HAGY	85-305/47-63	100-430	15.03	9	1.67	3000	84
AMEL15S-12S277HAGY	85-305/47-63	100-430	15	12	1.25	2000	85
AMEL15S-15S277HAGY	85-305/47-63	100-430	15	15	1	1500	85
AMEL15S-24S277HAGY	85-305/47-63	100-430	15	24	0.625	680	86
Note: Use suffix "ST" for chassis mounting (ex. AMEL15S-3S277HAGY-ST is chassis mounting version).							

Input Specifications				
Parameters	Conditions	Typical	Maximum	Units
Input current	115VAC	450	--	mA
	230VAC	300	--	mA
Inrush current	115VAC	30	--	A
	230VAC	60	--	A
Leakage	277VAC, 50Hz	--	0.1	mA RMS
Fuse	3.15A/300V, Slow blow, *required*			

Output Specifications				
Parameters	Conditions	Typical	Maximum	Units
Voltage accuracy	--	±2.0	--	%
Line regulation	Full load	±0.5	--	%
Load regulation	0-100% load	±1.0	--	%
Ripple & Noise*	20MHz bandwidth, 3.3/5/9Vout	70	--	mV p-p
	20MHz bandwidth, 12Vout	100	--	mV p-p
	20MHz bandwidth, 15/24Vout	120	--	mV p-p
Start-up time	115VAC	1.5	--	Sec
	230VAC	1.0	--	Sec
Hold up time	115VAC	10	--	ms
	230VAC	55	--	ms
* Ripple and Noise are measured at 20MHz bandwidth with a 47µF electrolytic capacitor and a 0.1µF ceramic capacitor. Please refer to the application note for specific details.				

Isolation Specification				
Parameters	Conditions	Typical	Maximum	Units
Tested I/O voltage	60 sec	4000		VAC
Resistance I/O	500VDC	>100		MΩ

General Specifications

Parameters	Conditions	Typical	Maximum	Units
Protection class	Class II			
Overvoltage category	OVC II (altitude up to 4000 meters)			
Over current protection	Shut down o/p voltage, Auto recovery	≥ 110	--	% of Iout
Over voltage protection	3.3Vout, voltage clamp, hiccup	≥ 3.8	9	VDC
	5Vout, voltage clamp, hiccup	≥ 5.5	9	VDC
	9Vout, voltage clamp, hiccup	≥ 10	16	VDC
	12Vout, voltage clamp, hiccup	≥ 13	15	VDC
	15Vout, voltage clamp, hiccup	≥ 17	24	VDC
	24Vout, voltage clamp, hiccup	≥ 26	34	VDC
Short circuit protection	Hiccup, Continuous, Auto recovery			
Operating altitude	See derating graph	--	5000	m
Operating temperature	See derating graph	-40 to +85	--	°C
Storage temperature		-40 to +85	--	°C
Wave soldering temperature	Duration 10s max.	260	--	°C
Manual soldering temperature	Duration 5s max.	370	--	°C
No-load power consumption	230VAC	--	0.12	W
Power Derating	3.3, 5Vout +50°C to +70°C	3		%/°C
	9, 12, 15, 24Vout +55°C to +70°C	2.67		%/°C
	All models, +70°C to +85°C	0.67		%/°C
	85VAC to 100VAC	1.33		%/VAC
	100VDC to 120VDC	1		%/VDC
	277VAC to 305VAC	0.71		%/VAC
	290VDC to 430VDC	0.14		%/VDC
	2000 - 5000m	6.67		%/km
Temperature coefficient	0 ~ 40°C	±0.02	--	%/°C
Cooling	Free air convection			
Humidity	Non-condensing, Operating	>20	95	% RH
	Non-condensing, Storage	>10	95	% RH
Vibration	PCB mountable models	10Hz ~ 500Hz, 2G, 10 min./1cycle, 60min. along X, Y and Z axis		
	With optional -ST mounting plate	10Hz ~ 500Hz, 5G, 10 min./1cycle, 60min. along X, Y and Z axis		
Case material	Plastic (flammability to UL 94V-0)			
Weight	PCB mountable models	48	--	g
	With optional -ST mounting plate	68	--	g
Dimensions (L x W x H)	PCB mountable models	1.87 x 1.06 x 0.93 inches (47.40 x 26.80 x 23.50 mm)		
	With optional -ST mounting plate	2.98 x 1.23 x 1.27 inches (75.80 x 31.30 x 32.20 mm)		
MTBF	> 300 000 hrs (MIL-HDBK -217F, t=+25°C)			

NOTE: All specifications in this datasheet are measured at an ambient temperature of 25°C, humidity<75%, nominal input voltage and at rated output load unless otherwise specified.

Safety Specifications

Parameters		
Agency Approvals	UL62368-1	
Standards	Information technology Equipment	Design references : IEC/EN/BS EN 62368-1, EN60335-1, EN61558-1, IEC/EN60601-1, ANSI/AAMI ES60601-1
	EMC - Conducted and radiated emission	EN55014-1, class B
	Harmonic current	EN61000-3-2, class A
	Voltage flicker	EN61000-3-3
	Electrostatic Discharge Immunity	EN61000-4-2 Contact ±4KV, Air ±8KV, Criteria B

	RF, Electromagnetic Field Immunity	EN61000-4-3 10V/m, Criteria A
	Electrical Fast Transient/Burst Immunity	EN61000-4-4 ±2KV, Criteria B
	Surge Immunity	EN61000-4-5 L-L ±1KV, Criteria B
	RF, Conducted Disturbance Immunity	EN61000-4-6 10Vr.m.s, Criteria A
	Voltage dips, Short Interruptions Immunity	EN61000-4-11 >95% dip 0.5 periods, 30% dip 25 periods, >95% interruptions 250 periods

Typical Application Circuit

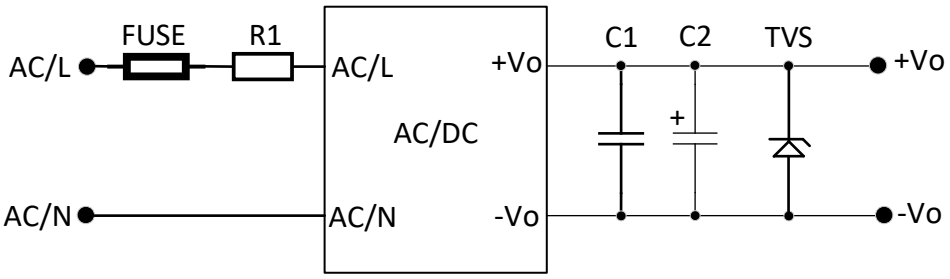

Model	FUSE	R1	C1	C2	TVS
3.3, 5Vout	3.15A, 300V	6.8 Ohm, 3W	1μF, 50V	220μF, 16V	SMBJ7.0A
9Vout	3.15A, 300V	6.8 Ohm, 3W	1μF, 50V	100μF, 25V	SMBJ12A
12, 15Vout	3.15A, 300V	6.8 Ohm, 3W	1μF, 50V	100μF, 25V	SMBJ20A
24Vout	3.15A, 300V	6.8 Ohm, 3W	1μF, 50V	100μF, 35V	SMBJ30A

Recommended EMC Circuit

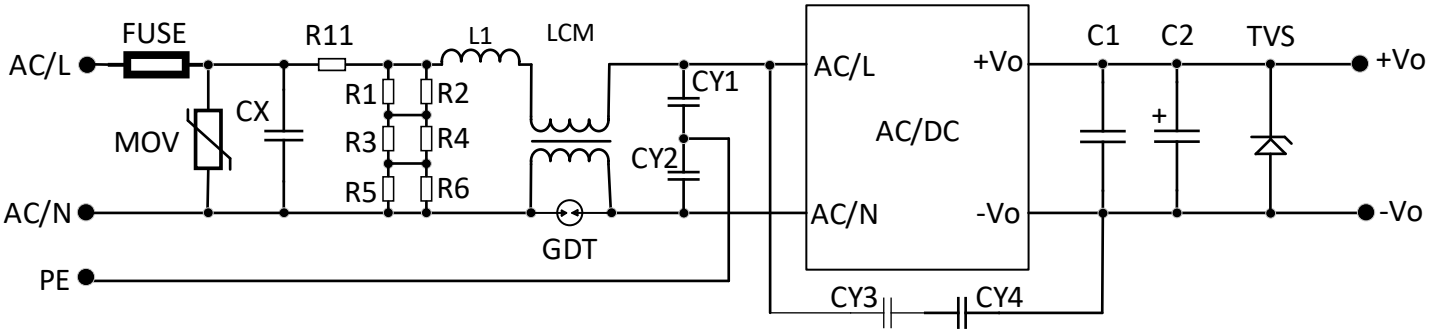

MOV	CX	R11	L1	LCM	GDT	CY1, CY2	CY3, CY4
14D561K	334K, 305VAC	12 Ohm, 5W	1.2mH, 0.3A	20mH	300V, 1KA	2.2nF, 400VAC	1nF, 400VAC

*R11 is wire-wounded resistor, FUSE is required, *R1 … R6 is the bleeder resistance of CX – 1.5Mohm/150VDC

Derating

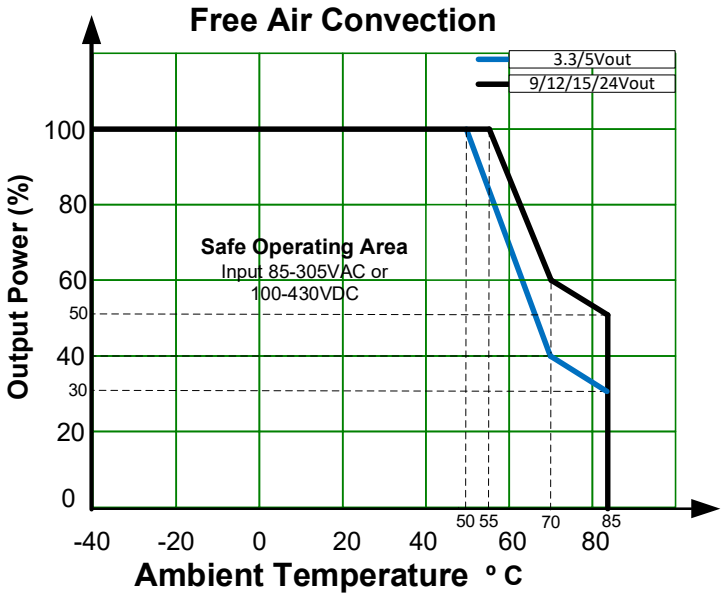
Free Air Convection
3.3/5Vout
9/12/15/24Vout
Output Power (%)
100
80
60
50
40
30
20
0
Safe Operating Area
Input 85-305VAC or
100-430VDC
50 55 70 85
-40 -20 0 20 40 60 80
Ambient Temperature °C

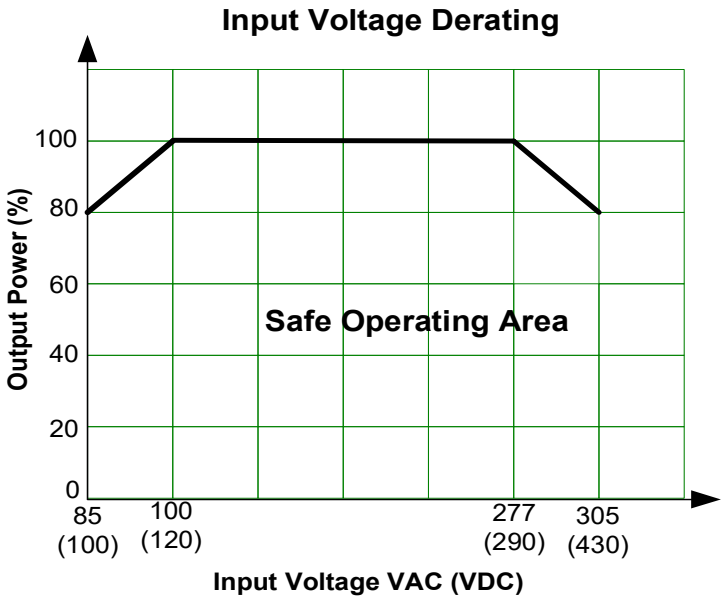
Input Voltage Derating
Output Power (%)
100
80
60
40
20
0
Safe Operating Area
85 (100)
100 (120)
277 (290)
305 (430)
Input Voltage VAC (VDC)

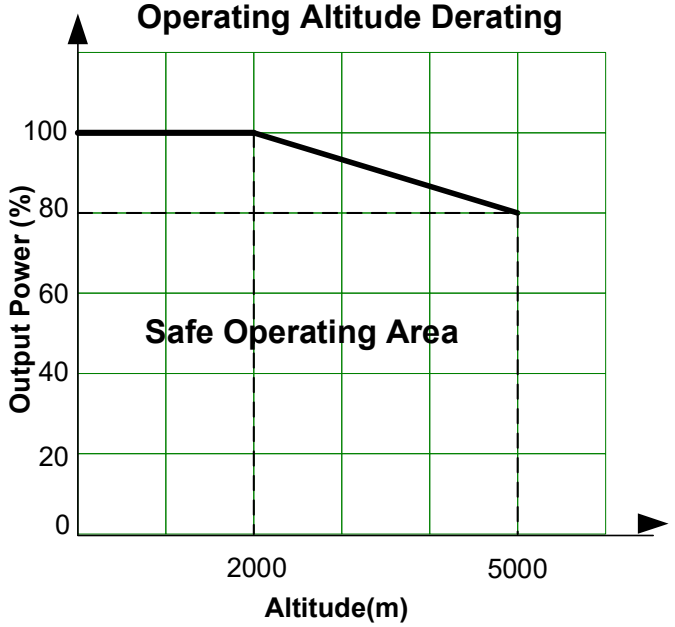
Operating Altitude Derating
Output Power (%)
100
80
60
40
20
0
Safe Operating Area
2000
5000
Altitude(m)

Dimensions

AMEL15S-277HAGY

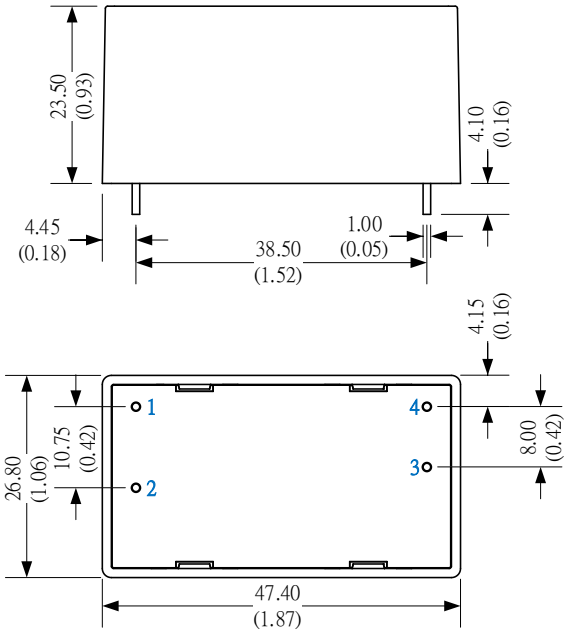

Unit: mm(inch)
General tolerance: ±0.50(±0.02)

Pin Output Specifications	
Pin	Function
1	AC Input (N)
2	AC Input (L)
3	+V Output
4	-V Output

AMEL15S-277HAGY-ST

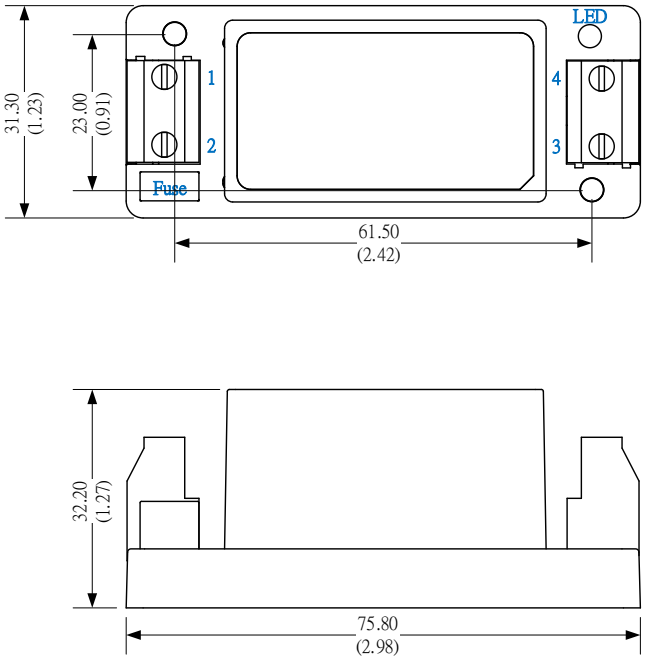

Unit: mm(inch)
General tolerance: ±1.00(±0.04)

Pin Output Specifications	
Pin	Function
1	AC Input (N)
2	AC Input (L)
3	-V Output
4	+V Output

NOTE: 1. Datasheets are updated as needed and as such, specifications are subject to change without notice. Once printed or downloaded, datasheets are no longer controlled by Aimtec; refer to www.aimtec.com for the most current product specifications. **2.** Product labels shown, including safety agency certifications on labels, may vary based on the date manufactured. **3.** Mechanical drawings and specifications are for reference only. **4.** All specifications are measured at an ambient temperature of 25°C, humidity<75%, nominal input voltage and at rated output load unless otherwise specified. **5.** Aimtec may not have conducted destructive testing or chemical analysis on all internal components and chemicals at the time of publishing this document. CAS numbers and other limited information are considered proprietary and may not be available for release. **6.** This product is not designed for use in critical life support systems, equipment used in hazardous environments, nuclear control systems or other such applications which necessitate specific safety and regulatory standards other the ones listed in this datasheet. **7.** Warranty is in accordance with Aimtec's standard Terms of Sale available at www.aimtec.com.