Click to ORDER samples

AMEL10S-277HAVZ



Encapsulated

The AMEL10S-277HAVZ series is an efficient 10W AC-DC power supply module. Offering a commercial input voltage range of 85-305VAC, output voltage ranges from 3.3-24V, low power consumption, high efficiency and high reliability.

This new series offers great operating temperatures, from -40°C to 85°C with full power from -25°C to 50°C and features an isolation of 4000VAC for improved reliability and system safety. Furthermore, a high MTBF of 1,500,000h, output short circuit protection (OSCP), output over-current protection (OCP) and an output over-voltage protection (OVP) come standard with the series.

The AMEL10S-277HAVZ is suitable for grid power, instrumentation, industrial controls, communication, and civil applications.

Features

- Universal Input: 85 - 305VAC/100 - 430VDC
- Operating Temp: -40 °C to +85 °C
- High isolation voltage: 4000VAC
- Low ripple & noise, 150mV(p-p), max.
- Output short circuit, over-current, over-voltage protection
- Regulated Output
- Efficiency up to 84%
- Designed to meet: EN/IEC/UL 62368-1, EN60335-1, EN61558-1
- Agency approvals: UL 62368-1

Summary

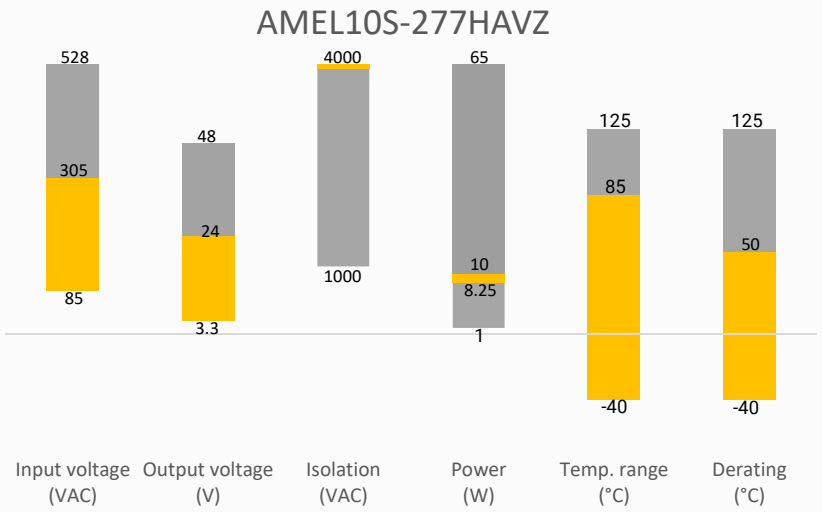

Training

Product Training Video (click to open)

Press Release

Coming Soon!

Application Notes

Applications

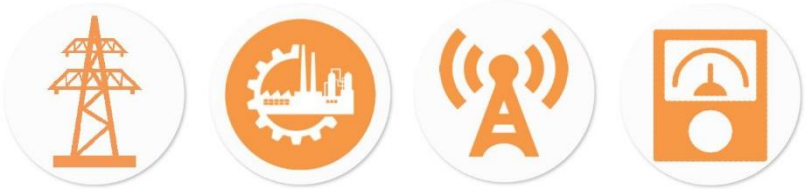

Power Grid | Industrial | Telecom | Instrumentation

Models & Specifications

Single Output

Model	Input Voltage (VAC/Hz)	Input Voltage (VDC)	Max Output wattage (W)	Output Voltage (V)	Output Current max (A)	Maximum capacitive load (µF)	Efficiency @ 230VAC Typ. (%)
AMEL10S-3S277HAVZ	85-305/47-63	100-430	8.58	3.3	2.6	6000	77
AMEL10S-5S277HAVZ	85-305/47-63	100-430	10	5	2	5000	80
AMEL10S-7S277HAVZ	85-305/47-63	100-430	10	7.5	1.33	3000	80
AMEL10S-9S277HAVZ	85-305/47-63	100-430	10	9	1.11	2800	81
AMEL10S-12S277HAVZ	85-305/47-63	100-430	10	12	0.83	940	83
AMEL10S-15S277HAVZ	85-305/47-63	100-430	10	15	0.66	470	84
AMEL10S-24S277HAVZ	85-305/47-63	100-430	10	24	0.45	470	84

Note : Add suffix "-ST" for optional screw terminal bottom plate (ex. AMEL10S-3S277HAVZ-ST) or "-STD" for optional DIN rail screw terminal bottom plate (ex. AMEL10S-3S277HAVZ-STD). Models with terminal bottom plates have their efficiency decreased by 2%.

Input Specifications

Parameters	Conditions	Typical	Maximum	Units
Input current	115VAC		230	mA
	230VAC		150	mA
Inrush current	115VAC	25		A
	230VAC	45		A
Leakage	277VAC, 50Hz		0.1	mA RMS
Fuse	2A/300V, Slow blow, *required*			

Output Specifications

Parameters	Conditions	Typical	Maximum	Units
Voltage accuracy		±3		%
Line regulation	Full load	±0.5		%
Load regulation	0-100% load	±1		%
Ripple & Noise*	20MHz bandwidth	60	150	mV p-p
Hold up time	115VAC	10		ms
	230VAC	40		ms

* Ripple and Noise are measured at 20MHz bandwidth with a 47µF electrolytic capacitor and a 0.1µF ceramic capacitor. Please refer to the application note for specific details.

Isolation Specification

Parameters	Conditions	Typical	Maximum	Units
Tested I/O voltage	60 sec	4000		VAC
Resistance	500VDC	>100		MΩ

General Specifications

Parameters	Conditions	Typical	Maximum	Units
Protection class	Class II			
Overvoltage category	OVC III			
Over current protection	Auto recovery	≥ 110		% of Iout
Over voltage protection	3.3, 5 Vout, voltage clamp, hiccup		7.5	VDC
	7.5, 9 Vout, voltage clamp, hiccup		15	VDC
	12, 15 Vout, voltage clamp, hiccup		20	VDC
	24 Vout, voltage clamp, hiccup		30	VDC
Short circuit protection	Hiccup, Continuous, Auto recovery			
Switching Frequency		65		KHz
Operating altitude	See derating graph		5000	m
Operating temperature	See derating graph	-40 to +85		°C
Storage temperature		-40 to +105		°C
Reflow soldering temperature	Duration 5s	260		°C
Maximum case temperature			95	°C
No-load power consumption	230VAC	0.1		W
Power Derating	-40 °C to -25 °C	2		%/°C
	3.3, 5, 7.5, 24Vout +50 °C to +85 °C	1.71		%/°C
	9, 12, 15Vout +55 °C to +85 °C	2		%/°C
	85VAC to 115VAC	0.83		%/VAC
	2000 - 5000m	6.7		%/km
Temperature coefficient		±0.02		%/°C
Cooling	Free air convection			
Humidity	Non-condensing	≥10	95	% RH
Vibration	10Hz to 55Hz, 5G, 30 minutes along X, Y and Z axis			
Case material	Plastic (flammability to UL 94V-0)			
Weight	PCB mountable models	30		g
	With optional -ST mounting plate	50		g
	With optional -STD mounting plate	70		g
Dimensions (L x W x H)	PCB mountable models	1.57 x 1.00 x 0.79 inches (40.00 x 25.40 x 20.00 mm)		
	With optional -ST mounting plate	2.99 x 1.24 x 1.13 inches (76.00 x 31.50 x 28.80 mm)		
	With optional -STD mounting plate	2.99 x 1.24 x 1.32 inches (76.00 x 31.50 x 33.40 mm)		
MTBF	> 1 500 000 hrs (MIL-HDBK -217F, t=+25°C)			

NOTE: All specifications in this datasheet are measured at an ambient temperature of 25°C, humidity<75%, nominal input voltage and at rated output load unless otherwise specified.

Safety Specifications

Parameters		
Agency Approvals	UL 62368-1 (Except for models with suffix “-ST” or “-STD”)	
Standards	Designed to meet EN/IEC/UL 62368-1, UKCA, EN60335-1, EN61558-1	
	EMC - Conducted and radiated emission	CISPR32 / EN55032, class B
	Electrostatic Discharge Immunity	IEC/EN61000-4-2 Contact ±6KV, Air ±8KV, Criteria B
	RF, Electromagnetic Field Immunity	IEC/EN61000-4-3 10V/m, Criteria A
	Electrical Fast Transient/Burst Immunity	IEC/EN61000-4-4 ±2KV, Criteria B (with the recommended application circuit) ±4KV, Criteria B (with the recommended EMC circuit)
	Surge Immunity	IEC/EN61000-4-5 L-L ±1KV, Criteria B (with the recommended application circuit) L-L ±2KV, Criteria B (with the recommended EMC circuit)
	RF, Conducted Disturbance Immunity	IEC/EN61000-4-6 10Vr.m.s, Criteria A
	Voltage dips, Short Interruptions Immunity	IEC/EN61000-4-11 0%, 70%, Criteria B

Typical Application Circuit

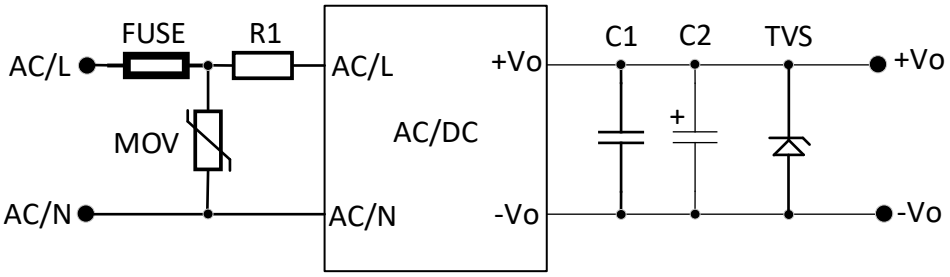

Model	FUSE	MOV	R1	C1	C2	TVS
3.3, 5Vout	2A, 300V	14D561K	6.8 Ohm, 5W	1µF, 50V	220µF, 16V	SMBJ7.0A
7.5, 9Vout	2A, 300V	14D561K	6.8 Ohm, 5W	1µF, 50V	100µF, 25V	SMBJ12A
12, 15Vout	2A, 300V	14D561K	6.8 Ohm, 5W	1µF, 50V	100µF, 25V	SMBJ20A
24Vout	2A, 300V	14D561K	6.8 Ohm, 5W	1µF, 50V	100µF, 35V	SMBJ30A

Recommended EMC Circuit

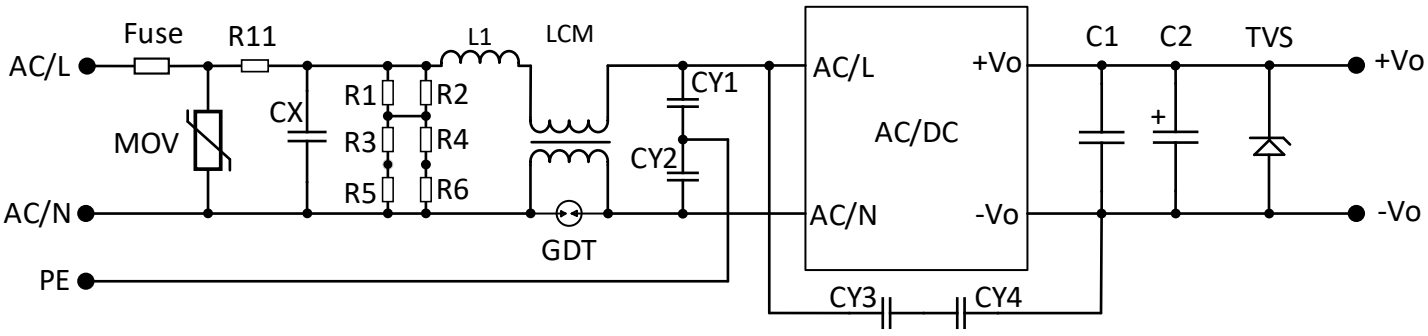

MOV	CX	R11	L1	LCM	GDT	CY1, CY2	CY3, CY4
14D561K	0.33µF, 305VAC	12 Ohm, 5W	1.2mH, 0.5A	22mH	300V, 1KA	2.2nF, 400VAC	1nF, 400VAC

*R11 is wire-wounded resistor, FUSE is required, *R1 … R6 is the bleeder resistance of CX – 1.5Mohm, 1206
*Other components see the Typical Application Circuit above

Derating

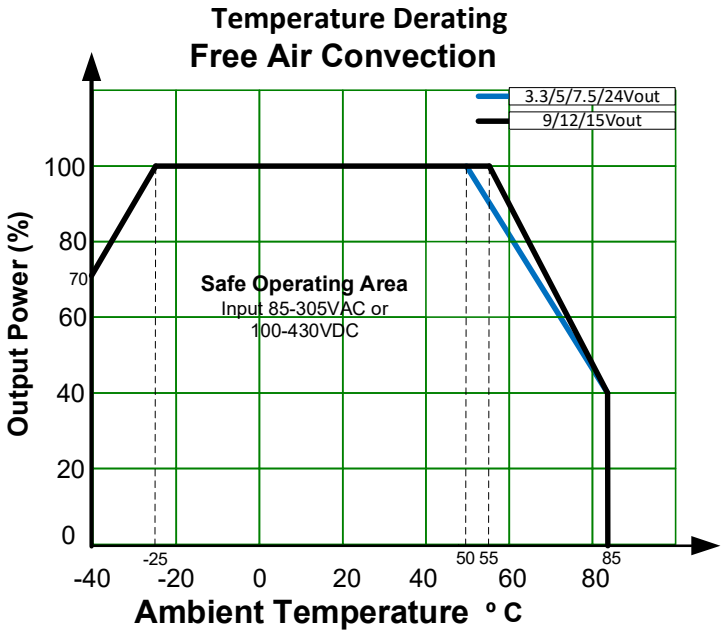
Temperature Derating
Free Air Convection
3.3/5/7.5/24Vout
9/12/15Vout
Output Power (%)
100
80
70
60
40
20
0
Safe Operating Area
Input 85-305VAC or
100-430VDC
-25
50 55
85
-40
-20
0
20
40
60
80
Ambient Temperature ° C

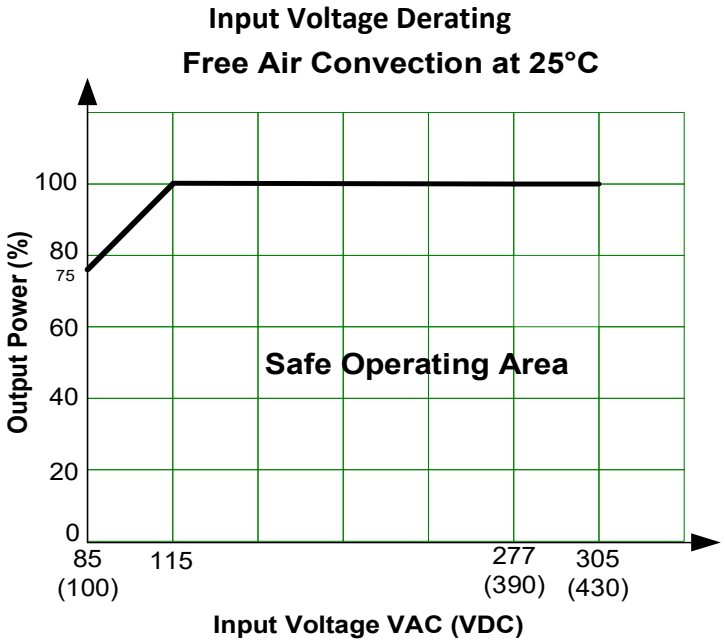
Input Voltage Derating
Free Air Convection at 25°C
Output Power (%)
100
80
75
60
40
20
0
Safe Operating Area
85
(100)
115
277
(390)
305
(430)
Input Voltage VAC (VDC)

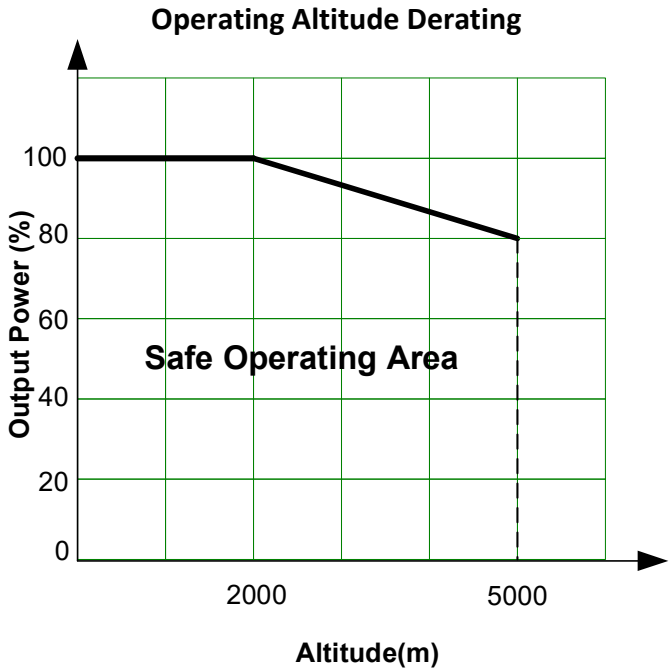
Operating Altitude Derating
Output Power (%)
100
80
60
40
20
0
Safe Operating Area
2000
5000
Altitude(m)

Dimensions

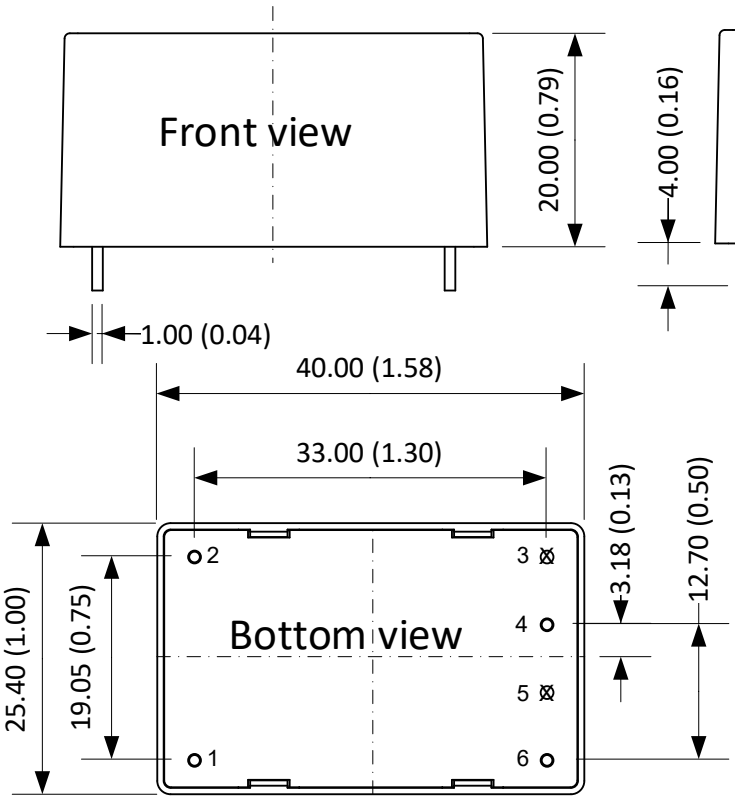

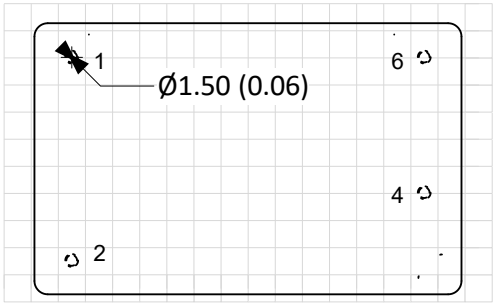

Grid size: 2.54*2.54mm

Note:
Unit: mm(inch)
General tolerance: ±1.0 (±0.04)
Pin diameter tolerance: ±0.15 (±0.006)

Pin Output Specifications	
Pin	Function
1	AC Input (L)
2	AC Input (N)
3	NP
4	+V Output
5	NP
6	-V Output

Dimensions with ST Optional

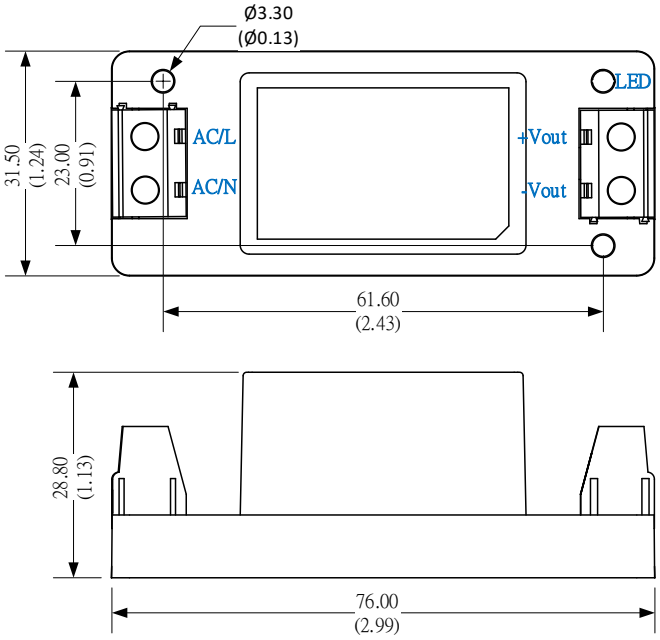

Unit: mm(inch)
General tolerance: ±1.00(±0.04)
Tightening torque: 0.4 Nm Max.
Wire gauge : 12~24 AWG

Dimensions with STD Optional

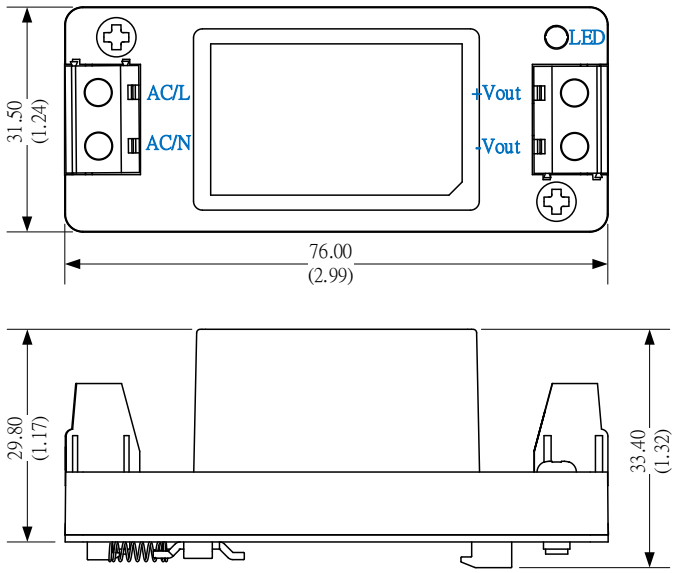

Unit: mm(inch)
General tolerance: ±1.00(±0.04)
Tightening torque: 0.4 Nm Max.
Wire gauge : 12~24 AWG

NOTE: 1. Datasheets are updated as needed and as such, specifications are subject to change without notice. Once printed or downloaded, datasheets are no longer controlled by Aimtec; refer to www.aimtec.com for the most current product specifications. **2.** Product labels shown, including safety agency certifications on labels, may vary based on the date manufactured. **3.** Mechanical drawings and specifications are for reference only. **4.** All specifications are measured at an ambient temperature of 25°C, humidity<75%, nominal input voltage and at rated output load unless otherwise specified. **5.** Aimtec may not have conducted destructive testing or chemical analysis on all internal components and chemicals at the time of publishing this document. CAS numbers and other limited information are considered proprietary and may not be available for release. **6.** This product is not designed for use in critical life support systems, equipment used in hazardous environments, nuclear control systems or other such applications which necessitate specific safety and regulatory standards other the ones listed in this datasheet. **7.** Warranty is in accordance with Aimtec's standard Terms of Sale available at www.aimtec.com.