Click to ORDER samples

# AMEL10S-277HAGY

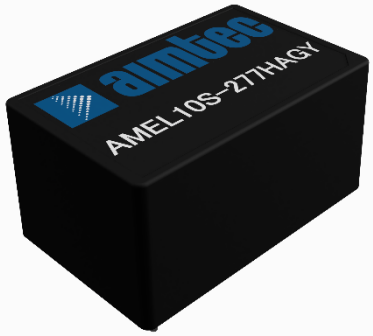


Encapsulated

The AMEL10S-277HAGY series is an efficient 10W AC-DC power supply module. Offering a commercial input voltage range of 85-305VAC, output voltage ranges from 3.3-24V, low power consumption, high efficiency and high reliability.

This new series offers great operating temperatures, from -40°C to 85°C with full power from -25°C to 50°C and features an isolation of 4000VAC for improved reliability and system safety. Furthermore, a high MTBF of 300,000h, output short circuit protection (OSCP), output over-current protection (OCP) and an output over-voltage protection (OVP) come standard with the series.

The AMEL10S-277HAGY is suitable for grid power, instrumentation, industrial controls, communication, and civil applications.

## Features

- Universal Input: 85 - 305VAC/100 - 430VDC
- Operating Temp: -40 °C to +85 °C
- High isolation voltage: 4000VAC
- Low ripple & noise, 100mV(p-p), typ.
- Output short circuit, over-current, over-voltage protection
- Regulated Output
- Efficiency up to 84%
- Designed to meet: EN 62368-1, EN60335-1, EN61558-1
- Agency approvals : UL62368-1

## Summary

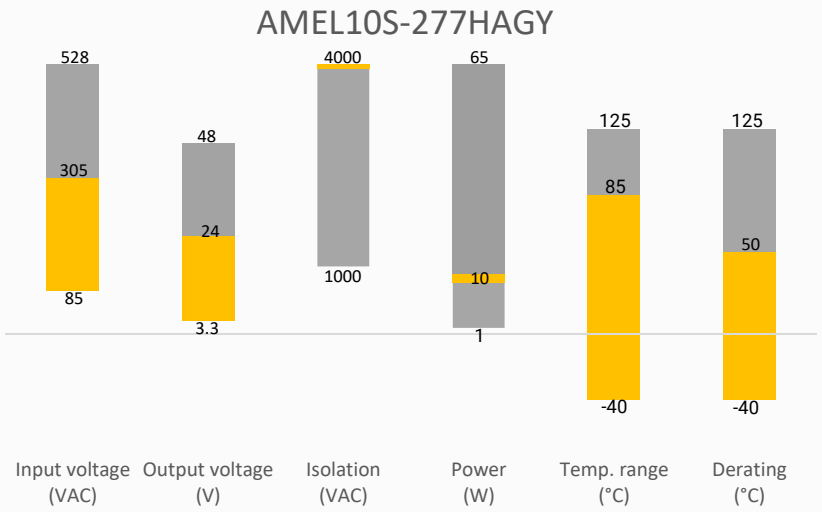


## Training

Product Training Video (click to open)

Press Release

Coming Soon!

Application Notes

## Applications

Power Grid | Industrial | Telecom | Instrumentation

# Models & Specifications

## Single Output

| Model | Input Voltage (VAC/Hz) | Input Voltage (VDC) | Max Output wattage (W) | Output Voltage (V) | Output Current max (A) | Maximum capacitive load (µF) | Efficiency @ 230VAC Typ. (%) |
|---|---|---|---|---|---|---|---|
| AMEL10S-3S277HAGY | 85-305/47-63 | 100-430 | 8.58 | 3.3 | 2.6 | 6600 | 74 |
| AMEL10S-5S277HAGY | 85-305/47-63 | 100-430 | 10 | 5 | 2 | 5000 | 79 |
| AMEL10S-9S277HAGY | 85-305/47-63 | 100-430 | 9.9 | 9 | 1.1 | 3600 | 81 |
| AMEL10S-12S277HAGY | 85-305/47-63 | 100-430 | 9.96 | 12 | 0.83 | 2000 | 83 |
| AMEL10S-15S277HAGY | 85-305/47-63 | 100-430 | 9.9 | 15 | 0.66 | 820 | 83 |
| AMEL10S-24S277HAGY | 85-305/47-63 | 100-430 | 9.84 | 24 | 0.41 | 470 | 84 |

Note: Use suffix "ST" for chassis mounting (ex. AMEL10S-3S277HAGY-ST is chassis mounting version).

## Input Specifications

| Parameters | Conditions | Typical | Maximum | Units |
|---|---|---|---|---|
| Input current | 115VAC | 230 | | mA |
| | 230VAC | 150 | | mA |
| Inrush current | 115VAC | 25 | | A |
| | 230VAC | 80 | | A |
| Leakage | 277VAC, 50Hz | | 0.1 | mA RMS |
| Fuse | 2A/300V, Slow blow, *required* | | | |

## Output Specifications

| Parameters | Conditions | Typical | Maximum | Units |
|---|---|---|---|---|
| Voltage accuracy | | ±2 | | % |
| Line regulation | Full load | ±0.5 | | % |
| Load regulation | 0-100% load | ±1 | | % |
| Ripple & Noise* | 20MHz bandwidth | 100 | | mV p-p |
| Hold up time | 115VAC | 8 | | ms |
| | 230VAC | 40 | | ms |

* Ripple and Noise are measured at 20MHz bandwidth with a 47µF electrolytic capacitor and a 0.1µF ceramic capacitor. Please refer to the application note for specific details.

## Isolation Specification

| Parameters | Conditions | Typical | Maximum | Units |
|---|---|---|---|---|
| Tested I/O voltage | 60 sec | 4000 | | VAC |
| Resistance | 500VDC | >100 | | MΩ |

## General Specifications

| Parameters | Conditions | Typical | Maximum | Units |
|---|---|---|---|---|
| Protection class | Class II | | | |
| Overvoltage category | OVC II | | | |
| Over current protection | Auto recovery | ≥ 110 | | % of Iout |

| | | | | |
|---|---|---|---|---|
| Over voltage protection | 3.3, 5Vout, voltage clamp, hiccup | | 9 | VDC |
| | 9Vout, voltage clamp, hiccup | | 16 | VDC |
| | 12Vout, voltage clamp, hiccup | | 15 | VDC |
| | 15Vout, voltage clamp, hiccup | | 24 | VDC |
| | 24Vout, voltage clamp, hiccup | | 34 | VDC |
| Short circuit protection | Hiccup, Continuous, Auto recovery | | | |
| Operating altitude | See derating graph | | 5000 | m |
| Operating temperature | See derating graph | -40 to +85 | | °C |
| Storage temperature | | -40 to +85 | | °C |
| Wave soldering temperature | Duration 10s max. | 260 | | °C |
| Manual soldering temperature | Duration 5s max. | 370 | | °C |
| No-load power consumption | 230VAC | | 0.12 | W |
| Power Derating | -40 °C to -25 °C, 115VAC | 2.2 | | %/°C |
| | 3.3, 5Vout +50°C to +70°C | 2.5 | | %/°C |
| | 9, 12, 15, 24Vout +55°C to +70°C | 3.33 | | %/°C |
| | 3.3, 5, 9, 12, 15, 24Vout +70°C to +85°C | 0.67 | | %/°C |
| | 85VAC to 100VAC | 1.67 | | %/VAC |
| | 100VDC to 120VDC | 1.25 | | %/VDC |
| | 2000 - 5000m | 6.67 | | %/km |
| Temperature coefficient | | ±0.02 | | %/°C |
| Cooling | Free air convection | | | |
| Humidity | Non-condensing, Operating | >20 | 95 | % RH |
| | Non-condensing, Storage | >10 | 95 | % RH |
| Vibration | PCB mountable models | 10Hz ~ 500Hz, 2G, 10 min./1cycle, 60min. along X, Y and Z axis | | |
| | With optional -ST mounting plate | 10Hz ~ 500Hz, 5G, 10 min./1cycle, 60min. along X, Y and Z axis | | |
| Case material | Plastic (flammability to UL 94V-0) | | | |
| Weight | PCB mountable models | 34 | | g |
| | With optional -ST mounting plate | 54 | | g |
| Dimensions (L x W x H) | PCB mountable models | 1.57 x 1.00 x 0.83 inches (40.00 x 25.40 x 21.00 mm) | | |
| | With optional -ST mounting plate | 2.98 x 1.23 x 1.17 inches (75.80 x 31.30 x 29.70 mm) | | |
| MTBF | > 300 000 hrs (MIL-HDBK -217F, t=+25°C) | | | |
| **NOTE: All specifications in this datasheet are measured at an ambient temperature of 25°C, humidity<75%, nominal input voltage and at rated output load unless otherwise specified.** | | | | |

## Safety Specifications

| Parameters | | |
|---|---|---|
| Agency Approvals | UL62368-1 | |
| Standards | Information technology Equipment | Designed to meet EN 62368-1, EN60335-1, EN61558-1 |
| | EMC - Conducted and radiated emission | EN55014-1, class B |
| | Harmonic current | EN61000-3-2 |
| | Voltage flicker | EN61000-3-3 |
| | Electrostatic Discharge Immunity | EN61000-4-2 Contact ±4KV, Air ±8KV, Criteria B |
| | RF, Electromagnetic Field Immunity | EN61000-4-3 10V/m, Criteria A |
| | Electrical Fast Transient/Burst Immunity | EN61000-4-4 ±2KV, Criteria B |
| | Surge Immunity | EN61000-4-5 L-L ±1KV, Criteria B |
| | RF, Conducted Disturbance Immunity | EN61000-4-6 10Vr.m.s, Criteria A |
| | Voltage dips, Short Interruptions Immunity | EN61000-4-11 >95% dip 0.5 periods, 30% dip 25 periods, >95% interruptions 250 periods |

## Typical Application Circuit

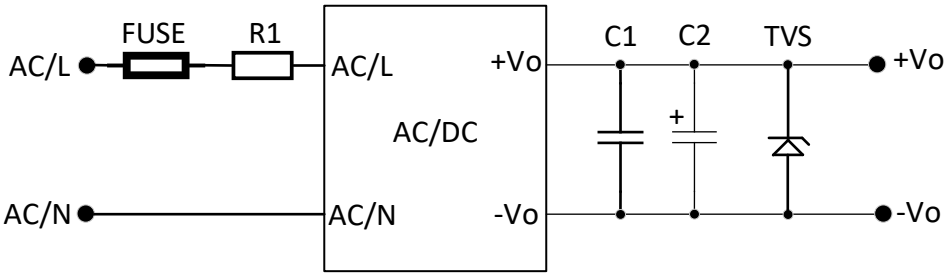


| Model | FUSE | R1 | C1 | C2 | TVS |
|---|---|---|---|---|---|
| 3.3, 5Vout | 2A, 300V | 6.8 Ohm, 3W | 1μF, 50V | 220μF, 16V | SMBJ7.0A |
| 9Vout | 2A, 300V | 6.8 Ohm, 3W | 1μF, 50V | 100μF, 25V | SMBJ12A |
| 12, 15Vout | 2A, 300V | 6.8 Ohm, 3W | 1μF, 50V | 100μF, 25V | SMBJ20A |
| 24Vout | 2A, 300V | 6.8 Ohm, 3W | 1μF, 50V | 100μF, 35V | SMBJ30A |

Table 1

## Recommended EMC Circuit

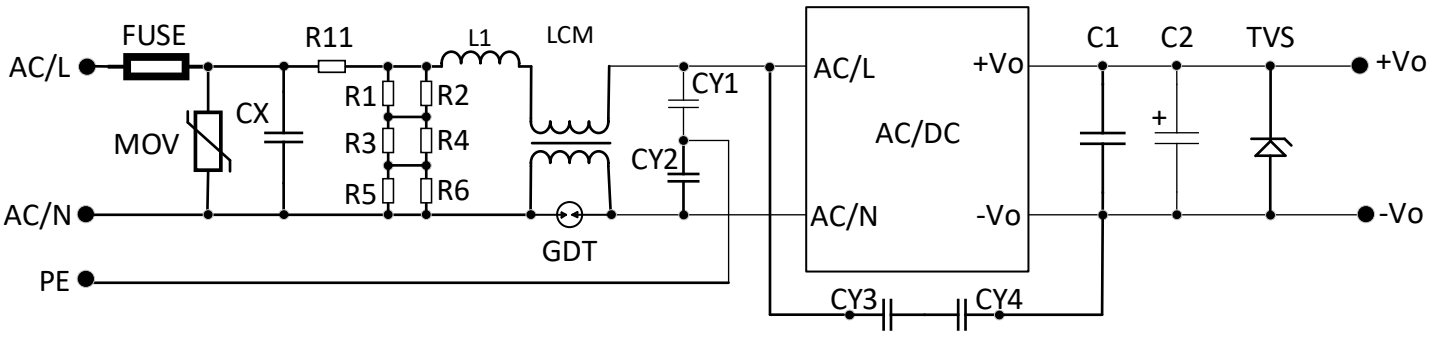


| MOV | CX | R11 | L1 | LCM | GDT | CY1, CY2 | CY3, CY4 |
|---|---|---|---|---|---|---|---|
| S14K350 | 334K, 305VAC | 12 Ohm, 5W | 1.2mH, 0.3A | 20mH | 300V, 1KA | 2.2nF, 400VAC | 1nF, 400VAC |

*R11 is wire-wounded resistor, FUSE is required, *R1 … R6 is the bleeder resistance of CX – 1.5Mohm/150VDC
*Other components see the same in Table 1

## Derating

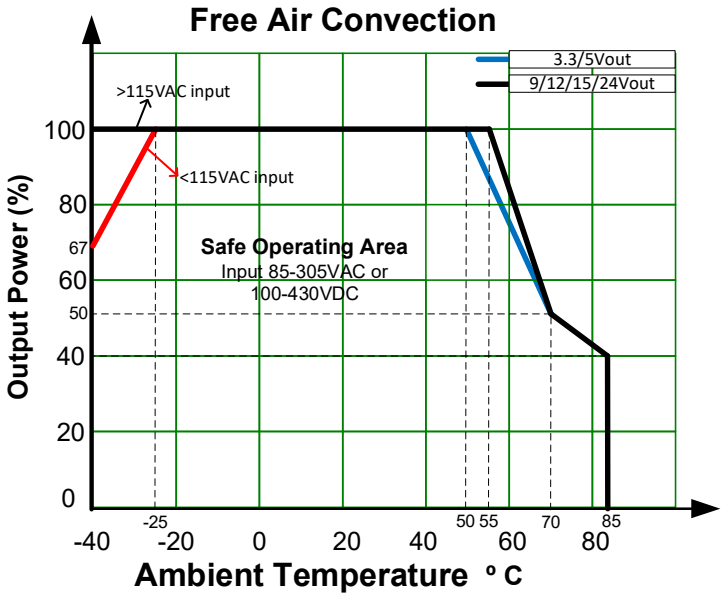
Free Air Convection
3.3/5Vout
9/12/15/24Vout
>115VAC input
<115VAC input
Safe Operating Area
Input 85-305VAC or
100-430VDC
Output Power (%)
100
80
67
60
50
40
20
0
-40
-25
-20
0
20
40
50
55
60
70
80
85
Ambient Temperature ° C

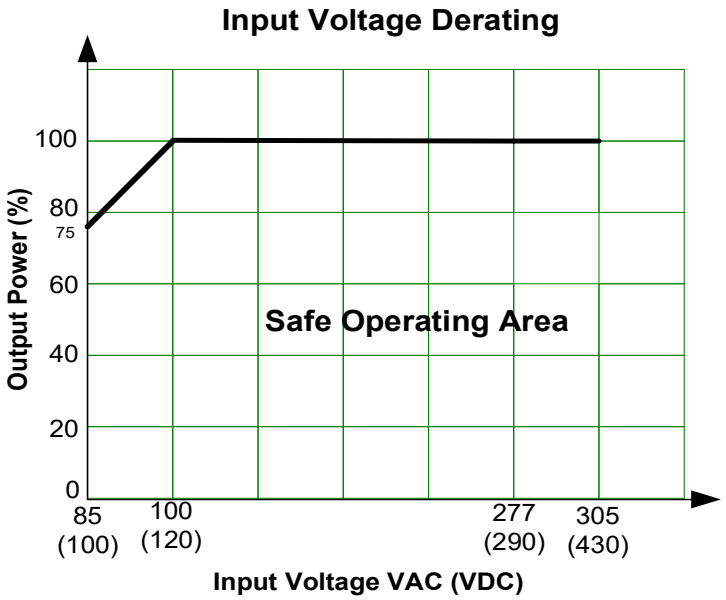
Input Voltage Derating
Output Power (%)
100
80
75
60
40
20
0
Safe Operating Area
85
(100)
100
(120)
277
(290)
305
(430)
Input Voltage VAC (VDC)

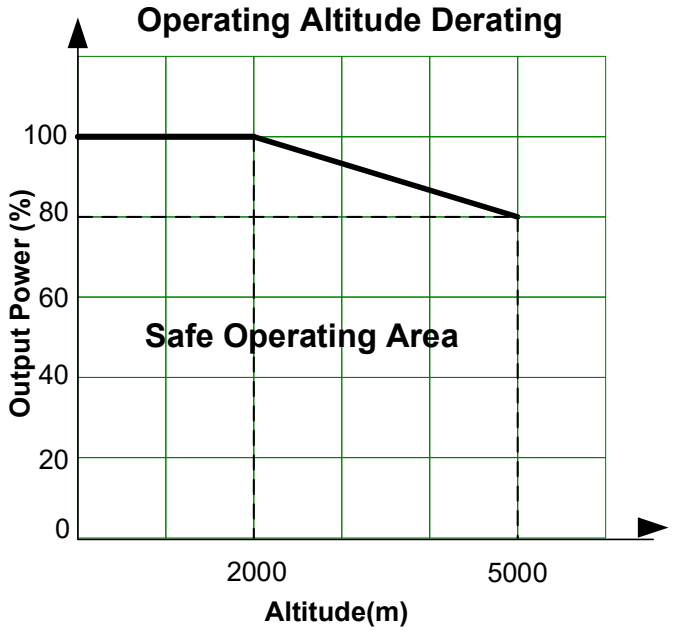
Operating Altitude Derating
Output Power (%)
100
80
60
40
20
0
Safe Operating Area
2000
5000
Altitude(m)

# Dimensions

## AMEL10S-277HAGY

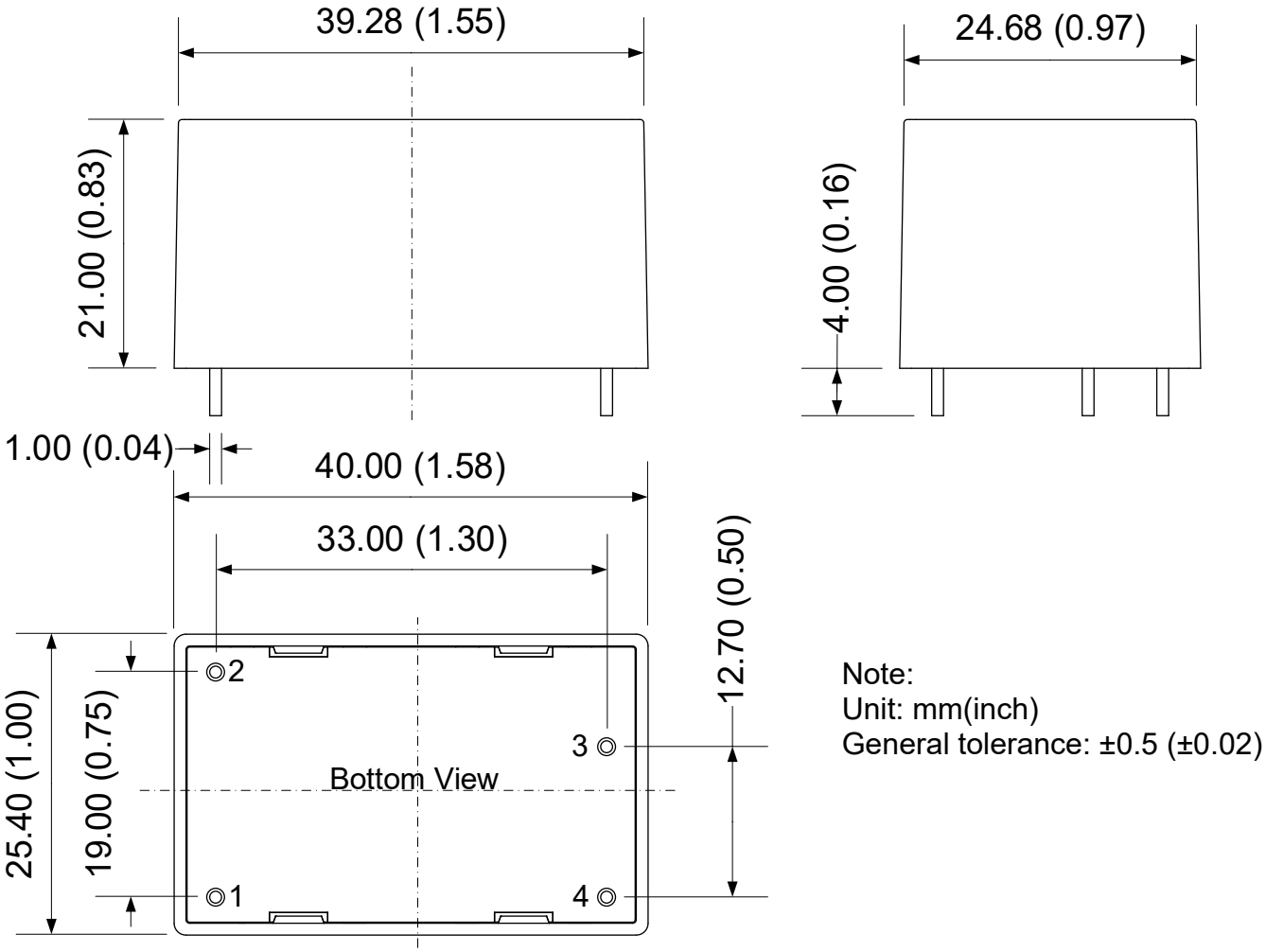


Note:
Unit: mm(inch)
General tolerance: ±0.5 (±0.02)

| Pin Output Specifications | |
|---|---|
| Pin | Function |
| 1 | AC Input (L) |
| 2 | AC Input (N) |
| 3 | +V Output |
| 4 | -V Output |

## AMEL10S-277HAGY-ST

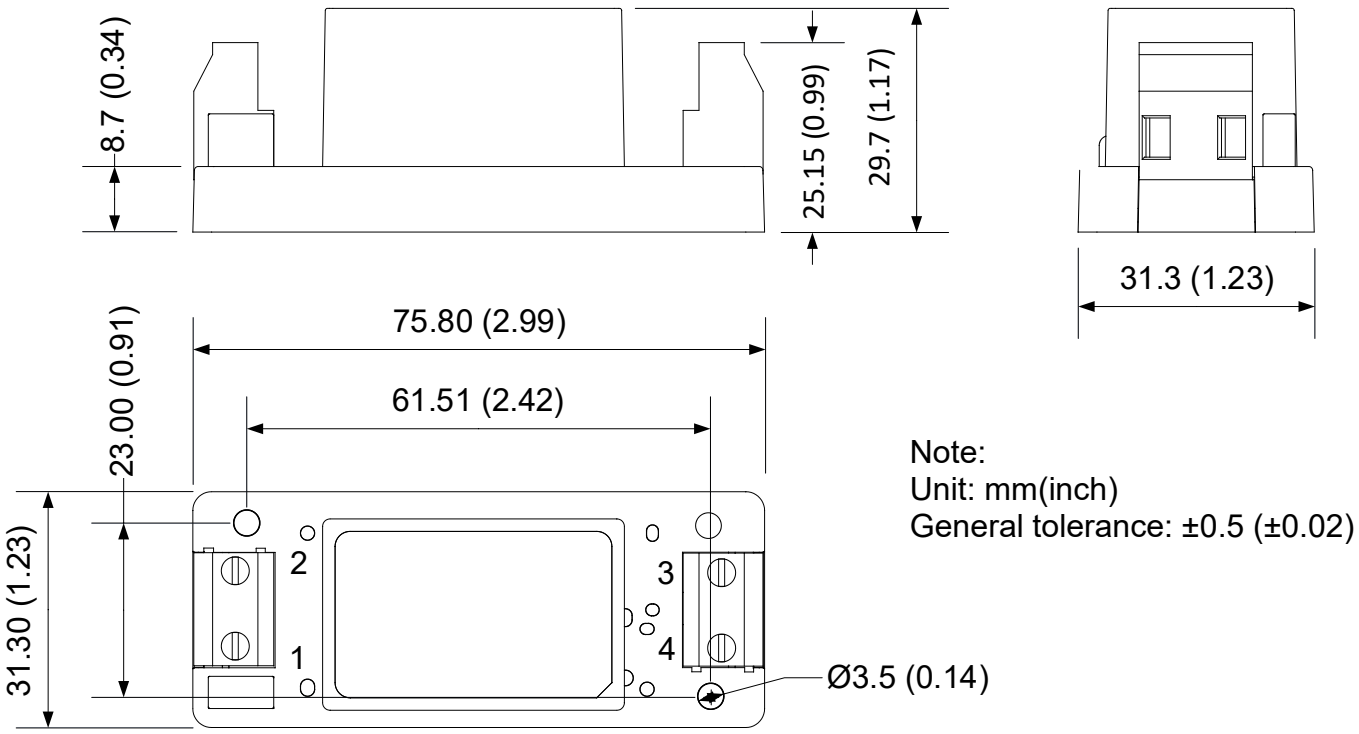


Note:
Unit: mm(inch)
General tolerance: ±0.5 (±0.02)

| Pin Output Specifications | |
|---|---|
| Pin | Function |
| 1 | AC Input (L) |
| 2 | AC Input (N) |
| 3 | +V Output |
| 4 | -V Output |

**NOTE: 1.** Datasheets are updated as needed and as such, specifications are subject to change without notice. Once printed or downloaded, datasheets are no longer controlled by Aimtec; refer to www.aimtec.com for the most current product specifications. **2.** Product labels shown, including safety agency certifications on labels, may vary based on the date manufactured. **3.** Mechanical drawings and specifications are for reference only. **4.** All specifications are measured at an ambient temperature of 25°C, humidity<75%, nominal input voltage and at rated output load unless otherwise specified. **5.** Aimtec may not have conducted destructive testing or chemical analysis on all internal components and chemicals at the time of publishing this document. CAS numbers and other limited information are considered proprietary and may not be available for release. **6.** This product is not designed for use in critical life support systems, equipment used in hazardous environments, nuclear control systems or other such applications which necessitate specific safety and regulatory standards other the ones listed in this datasheet. **7.** Warranty is in accordance with Aimtec's standard Terms of Sale available at www.aimtec.com.