Click to ORDER samples

AMEL10-277HAVZ



Encapsulated

AMEL10-277HAVZ series is an efficient 10W AC-DC power supply module. Offering a commercial input voltage range of 85-305VAC, output voltage ranges from 3.3-24V, low power consumption, high efficiency and high reliability.

This new series offers great operating temperatures, from -40°C to 85°C with full power up to 50°C and features an isolation of 4000VAC with OVC III for improved reliability and system safety. Furthermore, a high MTBF of 1,500,000h, output short circuit protection (OSCP), output over-current protection (OCP) and an output over-voltage protection (OVP) come standard with the series.

The AMEL10-277HAVZ is suitable for grid power, instrumentation, industrial controls, communication, and civil applications.

Features

- Universal Input: 85 - 305VAC/100 - 430VDC
- Operating Temp: -40 °C to +85 °C
- High isolation voltage: 4000VAC
- Low ripple & noise, 150mV(p-p), max.
- Output short circuit, over-current, over-voltage protection
- Regulated Output
- Efficiency up to 85%
- Agency approvals: IEC/EN 62368-1, EN60335-1, EN 61558-1
- Designed to meet: UL 62368-1

RoHS 3yr Warranty CE

Summary

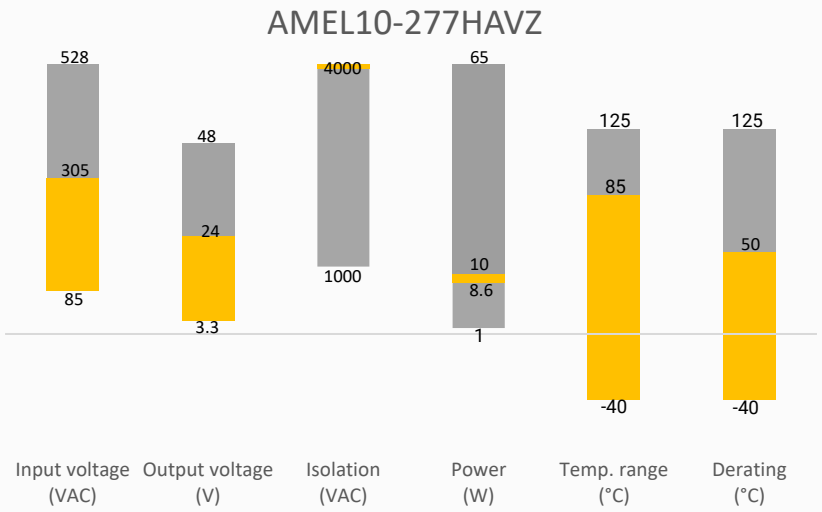

Training



Product Training Video (click to open)

Press Release

Application Notes

Coming Soon!

Applications

Power Grid

Industrial

Telecom

Instrumentation

Models & Specifications

Single Output							
Model	Input Voltage (VAC/Hz)	Input Voltage (VDC)	Max Output wattage (W)	Output Voltage (V)	Output Current max (A)	Maximum capacitive load (µF)	Efficiency @ 230VAC Typ. (%)
AMEL10-3S277HAVZ	85-305/47-63	100-430	8.6	3.3	2.6	6000	75
AMEL10-5S277HAVZ	85-305/47-63	100-430	10	5	2	5000	79
AMEL10-9S277HAVZ	85-305/47-63	100-430	10	9	1.1	3600	81
AMEL10-12S277HAVZ	85-305/47-63	100-430	10	12	0.83	2000	83
AMEL10-15S277HAVZ	85-305/47-63	100-430	10	15	0.66	820	84
AMEL10-18S277HAVZ	85-305/47-63	100-430	10	18	0.56	820	84
AMEL10-24S277HAVZ	85-305/47-63	100-430	10	24	0.41	470	85

Note: Use suffix "ST" for chassis and suffix "STD" for DIN-rail mounting (ex. AMEL10-3S277HAVZ-ST is chassis mounting version and AMEL10-3S277HAVZ-STD is DIN-rail mounting version). Models with chassis mounting or DIN-rail mounting have their efficiency reduced by 2%.

Input Specifications

Parameters	Conditions	Typical	Maximum	Units
Input current	115VAC		230	mA
	230VAC		150	mA
Inrush current	115VAC	25		A
	230VAC	45		A
Leakage	277VAC, 50Hz		0.1	mA RMS
Recommended External Fuse	2A/300V, Slow blow, *required*			

Output Specifications

Parameters	Conditions	Typical	Maximum	Units
Voltage accuracy		±2		%
Line regulation	Full load	±0.5		%
Load regulation	0-100% load	±1		%
Ripple & Noise*	20MHz bandwidth	60	150	mV p-p
Start-up time		1		S
Hold up time	115VAC	10		ms
	230VAC	40		ms

* Ripple and Noise are measured at 20MHz bandwidth with a 47µF electrolytic capacitor and a 0.1µF ceramic capacitor. Please refer to the application note for specific details.

Isolation Specification

Parameters	Conditions	Typical	Maximum	Units
Tested I/O voltage	60 sec, leakage ≤ 5mA	4000		VAC
Resistance	500VDC	>100		MΩ

General Specifications

Parameters	Conditions	Typical	Maximum	Units
Protection class	Class II			
Overvoltage category	OVC III			
Over current protection	Auto recovery	≥ 110		% of Iout
Over voltage protection	3.3, 5Vout, voltage clamp, hiccup		7.5	VDC
	9Vout, voltage clamp, hiccup		15	VDC
	12, 15Vout, voltage clamp, hiccup		20	VDC
	24Vout, voltage clamp, hiccup		30	VDC
Short circuit protection	Hiccup, Continuous, Auto recovery			
Switching Frequency		65		KHz
Operating altitude			5000	m
Operating temperature	See derating graph	-40 to +85		°C
Storage temperature		-40 to +105		°C
Soldering temperature	5 seconds	260		°C
No-load power consumption	230VAC	0.1		W
Power Derating	+50 °C to +85 °C, 3.3/5Vout	1.71		%/°C
	+55 °C to +85 °C, 9/12/15/24Vout	2		%/°C
	85VAC to 115VAC	0.83		%/VAC
	2000 - 5000m	6.7		%/km
Temperature coefficient		±0.02		%/°C
Cooling	Free air convection			
Humidity	Non-condensing		95	% RH
Vibration	10Hz to 55Hz, 5G, 30 minutes along X, Y and Z axis			
Case material	Plastic (flammability to UL 94V-0)			
Weight	PCB mountable models	33		g
	With optional -ST mounting plate	53		g
	With optional -STD mounting plate	73		g
Dimensions (L x W x H)	PCB mountable models	1.58 x 1.00 x 0.85 inches (40.00 x 25.40 x 21.50 mm)		
	With optional -ST mounting plate	2.99 x 1.24 x 1.19 inches (76.00 x 31.50 x 30.30 mm)		
	With optional -STD mounting plate	2.99 x 1.24 x 1.37 inches (76.00 x 31.50 x 34.90 mm)		
MTBF	> 1 500 000 hrs (MIL-HDBK -217F, t=+25°C)			

NOTE: All specifications in this datasheet are measured at an ambient temperature of 25°C, humidity<75%, nominal input voltage and at rated output load unless otherwise specified.

Safety Specifications

Parameters		
Agency approvals	IEC/EN 62368-1, EN 60335-1, EN 61558-1	
Standards	Designed to meet UL 62368-1	
	EMC - Conducted and radiated emission	CISPR32 / EN55032, class B
	Electrostatic Discharge Immunity	IEC/EN61000-4-2 Contact ±6KV, Air ±15KV, Criteria B
	RF, Electromagnetic Field Immunity	IEC/EN61000-4-3 10V/m, Criteria A
	Electrical Fast Transient/Burst Immunity	IEC/EN61000-4-4 ±2KV, Criteria B IEC/EN61000-4-4 ±4KV, Criteria B with the recommended EMC circuit
	Surge Immunity	IEC/EN61000-4-5 L-L ±1KV, Criteria B IEC/EN61000-4-5 L-L ±2KV, Criteria B with the recommended EMC circuit
	RF, Conducted Disturbance Immunity	IEC/EN61000-4-6 10Vr.m.s, Criteria A
	Voltage dips, Short Interruptions Immunity	IEC/EN61000-4-11 0%, 70%, Criteria B

Derating

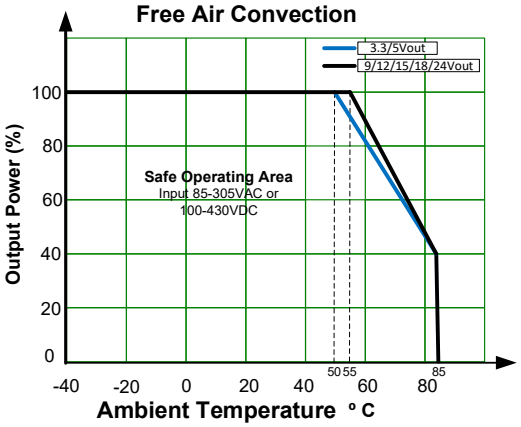
Free Air Convection
3.3/5Vout
9/12/15/18/24Vout
Safe Operating Area
Input 85-305VAC or
100-430VDC
Output Power (%)
100
80
60
40
20
0
-40
-20
0
20
40
50
55
60
80
85
Ambient Temperature ° C

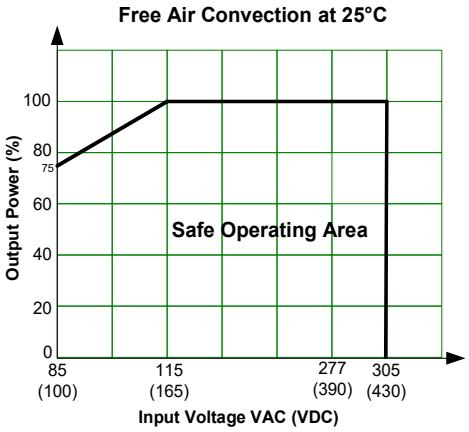
Free Air Convection at 25°C
Output Power (%)
100
80
75
60
40
20
0
Safe Operating Area
85
(100)
115
(165)
277
(390)
305
(430)
Input Voltage VAC (VDC)

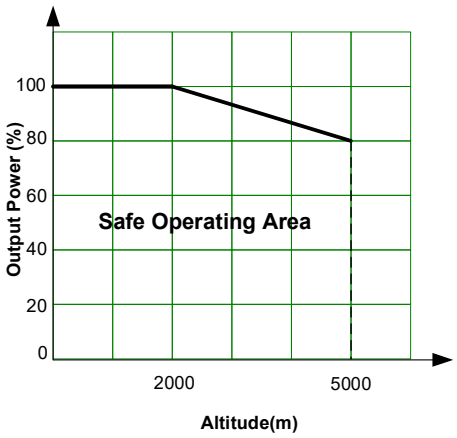
Output Power (%)
100
80
60
40
20
0
Safe Operating Area
2000
5000
Altitude(m)

Typical Application Circuit

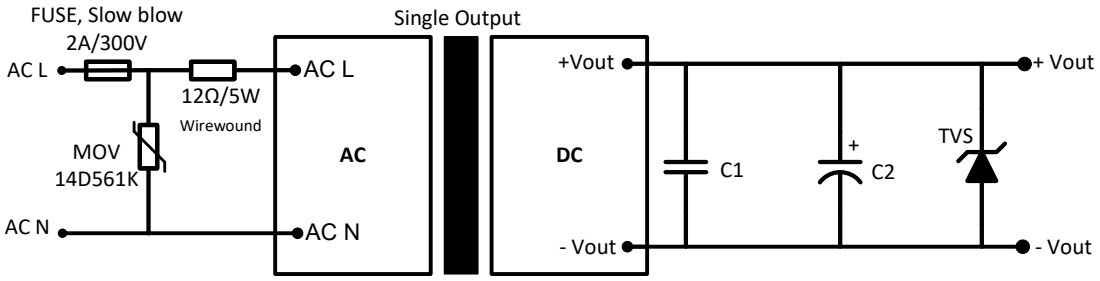

Model	C1	C2	TVS
3.3, 5Vout	1µF/16V	220µF/16V	SMBJ7.0A
9, 12, 15Vout	1µF/25V	100µF/25V	SMBJ12A
18, 24Vout	1µF/50V	100µF/35V	SMBJ20A

For filtering components:
The input fuse is recommended to use slow blow type.
Choose capacitors with at least 20% voltage margin.
The C2 capacitor is recommended to use electrolytic type with high frequency and low ESR rating.
The C1 capacitor is recommended to use ceramic type for filtering high-frequency noise.

Recommended EMC Circuit

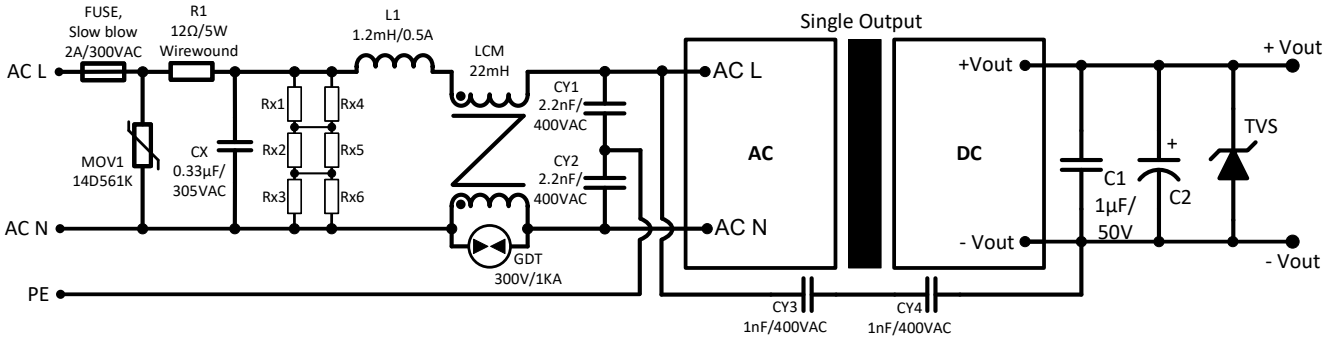

Rx1, Rx2, Rx3, Rx4, Rx5, Rx6
1.5MΩ/150VDC/1206

Dimensions

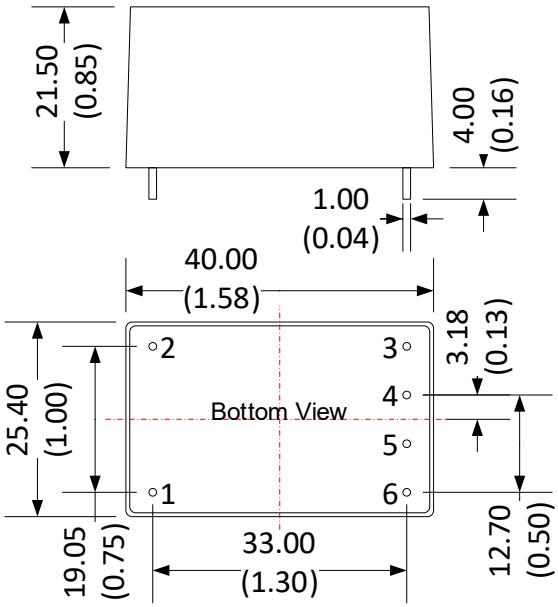

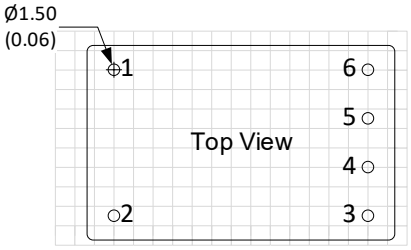

Grid size: 2.54*2.54mm

Pin Output Specifications	
Pin	Function
1	AC Input (L)
2	AC Input (N)
3	No Pin
4	+V Output
5	No Pin
6	-V Output

Note:
Unit: mm(inch)
General tolerance: ±1.00 (±0.04)
Pin diameter tolerance: ±0.15 (±0.006)

Dimensions with ST Optional

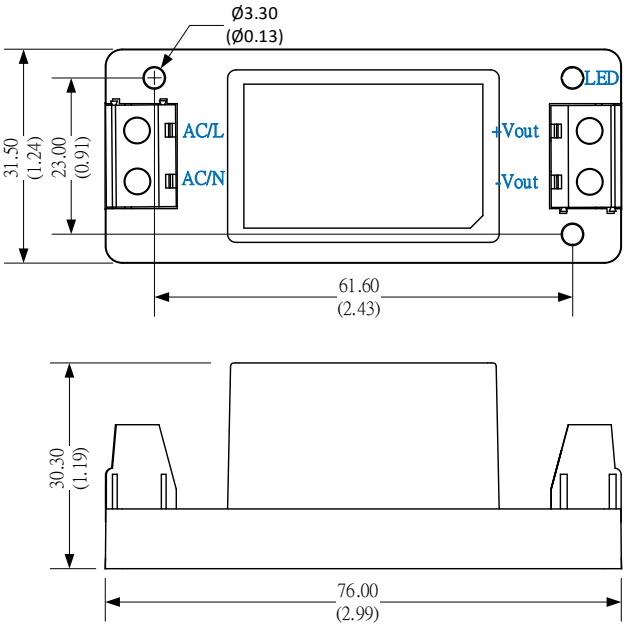

Unit: mm(inch)
General tolerance: ±1.00(±0.04)
Tightening torque: 0.4 Nm Max.
Wire gauge : 12~24 AWG

Dimensions with STD Optional

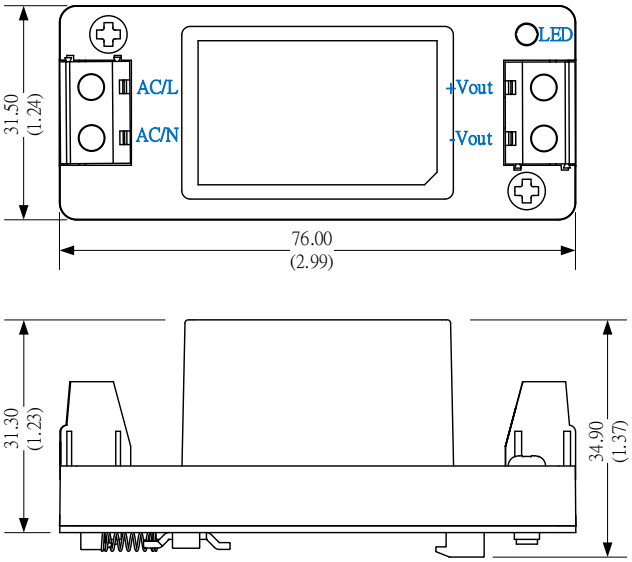

Unit: mm(inch)
General tolerance: ±1.00(±0.04)
Tightening torque: 0.4 Nm Max.
Wire gauge : 12~24 AWG

NOTE: 1. Datasheets are updated as needed and as such, specifications are subject to change without notice. Once printed or downloaded, datasheets are no longer controlled by Aimtec; refer to www.aimtec.com for the most current product specifications. **2.** Product labels shown, including safety agency certifications on labels, may vary based on the date manufactured. **3.** Mechanical drawings and specifications are for reference only. **4.** All specifications are measured at an ambient temperature of 25°C, humidity<75%, nominal input voltage and at rated output load unless otherwise specified. **5.** Aimtec may not have conducted destructive testing or chemical analysis on all internal components and chemicals at the time of publishing this document. CAS numbers and other limited information are considered proprietary and may not be available for release. **6.** This product is not designed for use in critical life support systems, equipment used in hazardous environments, nuclear control systems or other such applications which necessitate specific safety and regulatory standards other the ones listed in this datasheet. **7.** Warranty is in accordance with Aimtec's standard Terms of Sale available at www.aimtec.com.