AMED60W-GY

Click to ORDER samples



DIN Rail

The AMED60W-GY is a cost-effective DIN rail AC/DC converter that offers great energy efficiency. It accepts single and dual phase power distribution systems with an ultra-wide input voltage range of 180-550VAC and an output voltage range from 5-48V. Measuring 32.00 x 100.50 x 125.00mm, ambient air-cooling vents were placed both at the top and bottom of the converter improving thermal performance. The DIN rail is easy to install and remove for maintenance, while efficiently organizing all your electrical cables.

This new series offers great operating temperatures, from -30°C to 85°C also features an isolation of 4700VAC for improved reliability and system safety. Furthermore, a higher MTBF of 1,600,000h, output short circuit protection (OSCP), output over-load protection (OLP), output over-voltage protection (OVP), and an over temperature protection (OTP) come standard with the series. These functions are in addition to the regulatory compliance standards with this model for safety and protection.

The AMED60W-GY is suitable for electric distribution box, grid power, instrumentation, CNC, industrial control panel, building automation applications.

Features

- Wide Input: 180 - 550VAC/254 - 780VDC
- Operating Temp: -30 °C to +85 °C
- Isolation voltage: 4700VAC
- Low ripple & noise, 100mV(p-p), 120mV(p-p),150mV(p-p), and 200mV(p-p).
- Short circuit, overload, over voltage, over temperature protection
- DC OK Signal Output indication
- Overvoltage category III (OVC III)
- Designed for dual-phase applications

RoHS 3yr Warranty CE UKCA cULus LISTED

Summary

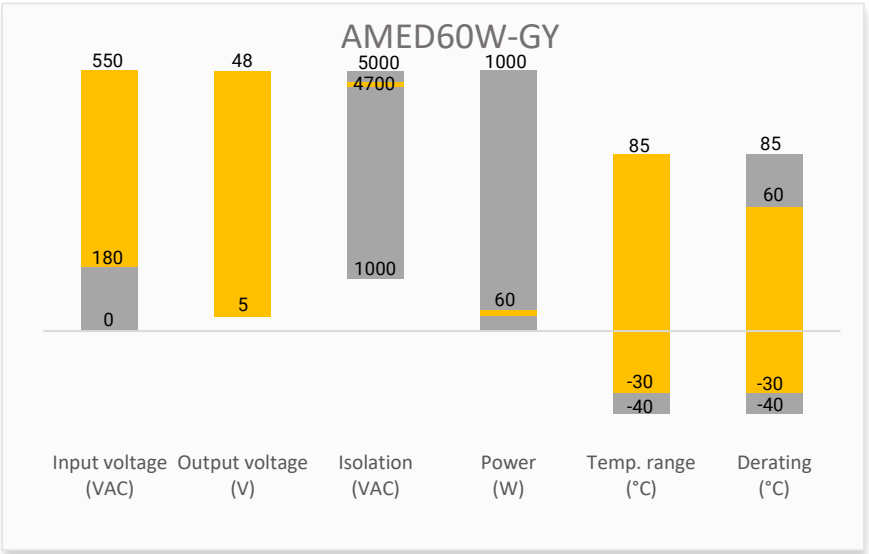

Training

Product Training Video (click to open)

Press Release

Coming Soon!

Application Notes

Applications



Power Grid | Industrial | Telecom

Models & Specifications

Model	Input Voltage (VAC/Hz)	Input Voltage (VDC)	Max Output wattage (W)	Output Voltage (V)	Output Current max (A)	Efficiency @ 230VAC Typ. (%)
AMED60W-5SGY	180~550/47~63	254~780	50	5	10	83.5
AMED60W-12SGY	180~550/47~63	254~780	60	12	5	86.5
AMED60W-24SGY	180~550/47~63	254~780	60	24	2.5	89.0
AMED60W-48SGY	180~550/47~63	254~780	60	48	1.25	90.5

Input Specifications				
Parameters	**Conditions**	**Typical**	**Maximum**	**Units**
Input Current	400VAC	0.4		A
	230VAC	0.7		A
Inrush Current	400VAC, cold start	50		A
	230VAC, cold start	30		A
Leakage Current	530VAC	<2.0		mA

Output Specifications				
Parameters	**Conditions**	**Typical**	**Maximum**	**Units**
Voltage accuracy		± 2.0		%
Line regulation	Rated load	± 0.5		%
Load regulation	5 VDC Output	± 1.5		%
	Others	± 0.5		%
Ripple & Noise*	5 VDC Output		100	mV p-p
	12 VDC Output		120	mV p-p
	24 VDC Output		150	mV p-p
	48 VDC Output		200	mV p-p
Start-up time	230VAC input, full load		1.0	s
	115VAC input, full load		2.0	s
Rise time	400VAC input, full load		70	ms
	230VAC input, full load		70	ms
Hold up time	400VAC input, full load	20		ms
	230VAC input, full load	10		ms
Voltage adjustable range	5 VDC Output	5 - 6		V
	12 VDC Output	12 - 15		V
	24 VDC Output	24 – 29		V
	48 VDC Output	48 - 57		V

* Ripple and Noise are measured at 20MHz bandwidth. Please refer to the application note for specific details. Measured with a 47µF electrolytic capacitor and a 0.1µF ceramic capacitor.

Isolation Specifications				
Parameters	**Conditions**	**Typical**	**Maximum**	**Units**
Tested I/O voltage	60 sec, Leakage current < 10mA	4700		VAC
Tested Input to GND voltage	60 sec, Leakage current < 10mA	2500		VAC
Tested Output to GND voltage	60 sec, Leakage current < 10mA	500		VAC
Tested Output to P-G signal	60 sec, Leakage current < 2mA	500		VAC
Insulation resistance	I/P to O/P, I/P-FG, O/P-FG, 500VDC, 25°C, 70%RH	100		MΩ

General Specifications				
Parameters	**Conditions**	**Typical**	**Maximum**	**Units**
Over voltage category	OVC III, According to EN61558, EN50178, EN60664-1, EN62477-1, EN60204-1			
Over voltage protection	5 VDC Output, manual-recovery	≤ 7.2		VDC
	12 VDC Output, manual-recovery	≤ 18.0		VDC
	24 VDC Output, manual-recovery	≤ 37.0		VDC
	48 VDC Output, manual-recovery	≤ 60.5		VDC
Over temperature protection	Output voltage turn off, manual-recovery			
Overload protection	105 ~ 135% rated output power <50% rated output voltage, hiccup, auto-recovery 50%-100% rated output voltage, constant current limiting, auto-recovery			
Short circuit protection	Hiccup, auto-recovery			
Operating temperature	20% ~ 95% RH Non-Condensing	-30 to +85		°C
Storage temperature	10 ~ 95% RH	-40 to +85		°C
Operating altitude			2000	m
Power derating	+60 °C to +85°C	2.8		% / °C
	180VAC - 210VAC	0.67		% / VAC
Temperature coefficient	0~60°C	± 0.03		% / °C
Cooling	Free air convection			
Storage Humidity	Non-condensing		10~95	% RH
Case material	Metal			
Weight		450		g
Dimensions (L x W x H)	1.26 x 3.96 x 4.92 inches (32.00 x 100.50 x 125.00 mm)			
MTBF	1600K hrs min. Telcordia SR-332 (Bellcore)			
NOTE: All specifications in this datasheet are measured at an ambient temperature of 25°C, humidity<75%, nominal input voltage and at rated output load unless otherwise specified.				

Safety Specifications		
Parameters		
Agency approval	UL61010-1, UL61010-2-201, BS EN/EN 62368-1	
Standards	EMC - Conducted and radiated emission	CISPR32 / EN55032, Class B
	Harmonic Current emission	IEC/EN 61000-3-2, Class A
	Voltage Fluctuations & Flicker	IEC/EN 61000-3-3
	Electrostatic Discharge Immunity	IEC/EN 61000-4-2 Contact ±4KV, Air ±8KV, Criteria B
	RF, Electromagnetic Field Immunity	IEC/EN 61000-4-3 3V/m, Criteria A
	Electrical Fast Transient/Burst Immunity	IEC/EN 61000-4-4 ±1KV, Criteria B
	Surge Immunity	IEC/EN 61000-4-5 L-L ±1KV, L-G ±2KV, Criteria B

	CS, Conducted Disturbance Immunity	IEC/EN 61000-4-6 3V, 3V~1V, 1V r.m.s, Criteria A
	Power Frequency Magnetic Field Immunity	IEC/EN 61000-4-8 50, 60Hz, Criteria A
	Voltage dips, Short Interruptions Immunity	IEC/EN 61000-4-11 100% Voltage Dips/Interruptions, 3 cycles, Criteria B

Derating

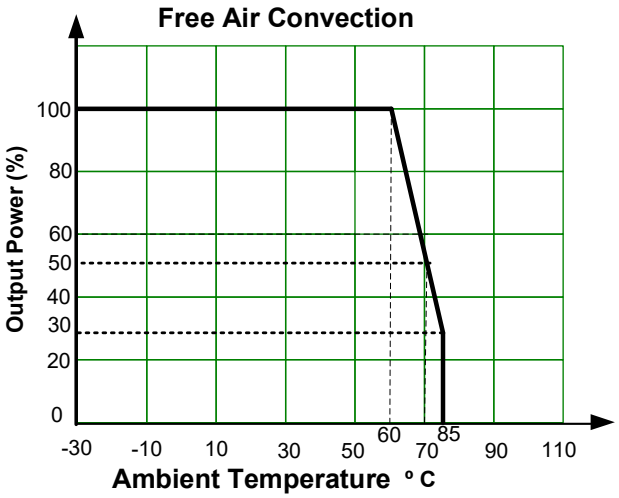

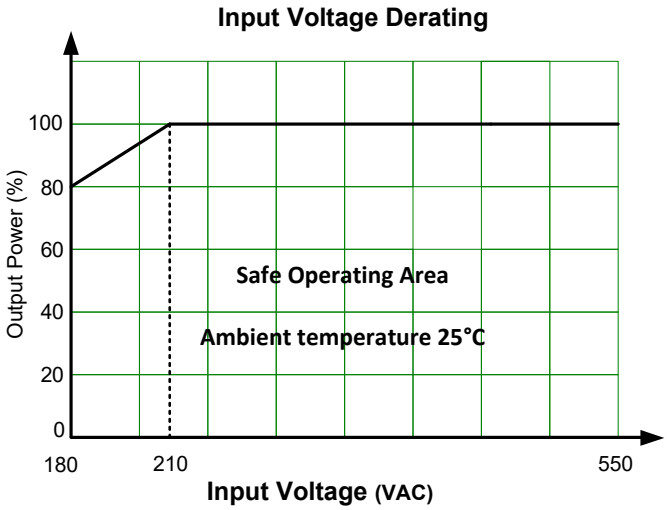

Functional Diagram

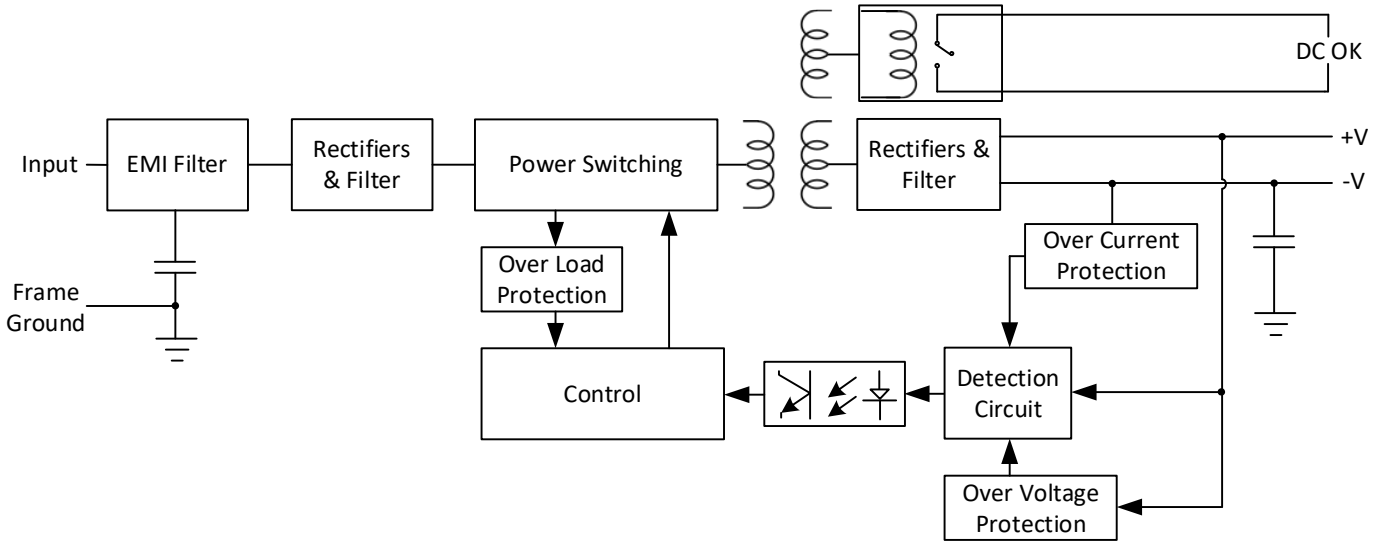

DC OK Active Signal Application

Contact Closed	Power Supply Unit turns on / DC OK
Contact Open	Power Supply Unit turns off / DC FAIL
Contact Ratings (maximum)	30V/1 A resistive load

Dimensions

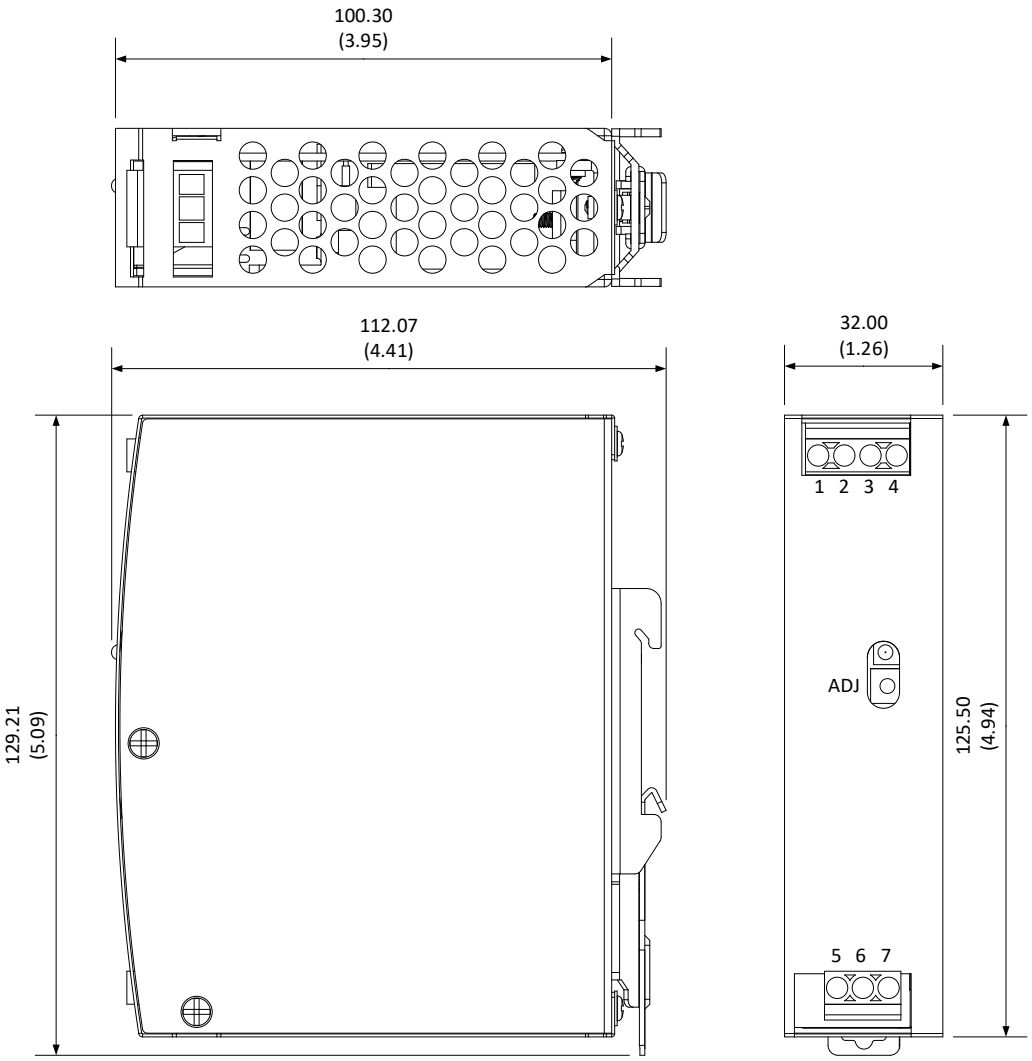

Pin Output Specifications	
Pin	**Function**
1	-V Output
2	+V Output
3	Relay Contact
4	Relay Contact
5	GND ⏚
6	L2
7	L1
ADJ	Voltage Adjustment

NOTE: 1. Datasheets are updated as needed and as such, specifications are subject to change without notice. Once printed or downloaded, datasheets are no longer controlled by Aimtec; refer to www.aimtec.com for the most current product specifications. **2.** Product labels shown, including safety agency certifications on labels, may vary based on the date manufactured. **3.** Mechanical drawings and specifications are for reference only. **4.** All specifications are measured at an ambient temperature of 25°C, humidity<75%, nominal input voltage and at rated output load unless otherwise specified. **5.** Aimtec may not have conducted destructive testing or chemical analysis on all internal components and chemicals at the time of publishing this document. CAS numbers and other limited information are considered proprietary and may not be available for release. **6.** This product is not designed for use in critical life support systems, equipment used in hazardous environments, nuclear control systems or other such applications which necessitate specific safety and regulatory standards other the ones listed in this datasheet. **7.** Warranty is in accordance with Aimtec's standard Terms of Sale available at www.aimtec.com.