Series AMEL5-AZ

5 Watt | AC-DC / DC-DC Converter



FEATURES:

- I/O Isolation 3000VAC
- Operating Temp: -40 °C to +95 °C
- Input: 90-305VAC, 47-440Hz, or 130-430VDC
- Over load, Over Voltage, Short Circuit Protection
- RoHS compliant
- Energy Star compliant
- Efficiency up to 76%
- Soft start

Models

Single output

Model	Input Voltage (VAC/Hz)	Input Voltage (VDC)	Temperature range (°C)	Output Voltage (V)	Output Current max (A)	Maximum capacitive Load (µF)	Efficiency (%)		
							115 VAC	230 VAC	277 VAC
AMEL5-3.3SAZ	90-305/47-440	130-430	-40 to +95	3.3	1. 5	2200	71	71	69
AMEL5-5SAZ	90-305/47-440	130-430	-40 to +95	5	1	1100	72	73	72
AMEL5-12SAZ	90-305/47-440	130-430	-40 to +95	12	0.42	680	75	76	76
AMEL5-15SAZ	90-305/47-440	130-430	-40 to +95	15	0.333	330	75	75	73
AMEL5-24SAZ	90-305/47-440	130-430	-40 to +95	24	0.21	220	75	76	75

Note: 1. Optional mounting plate version can be ordered by adding "-ST" suffix to part number (ex. AMEL5-5SAZ-ST);
2. Optional version with incorporated filter for Earth to Ground connection can be ordered by adding "G" to the model suffix (ex. AMEL5-5SGAZ).

Input Specifications

Parameters	Conditions	Typical	Maximum	Units
Current (full load)	115 VAC		120	mA
	230 VAC		80	mA
	277 VAC		70	mA
Inrush current <2ms (cold start)	115 VAC		15	A
	230 VAC		30	A
	277 VAC		40	A
Leakage current			0.2	mA
External fuse	Recommended slow blow type	1.5		A
Input dissipation	(110/230/277 VAC)	≦0.2		W
Start-up time	115 VAC/ Full Load	150		ms

Output Specifications

Parameters	Conditions	Typical	Maximum	Units
Voltage accuracy		±2		%
Line regulation		±1		%
Load regulation	0-100% load	±1		%
Transient recovery time		200		µs
Transient response deviation	25% load step	±2		% of Vout
Ripple & Noise*	3.3/5V models	75		mV p-p
	12/15V models	100		mV p-p
	24V models	150		mV p-p
Hold-up time		5		ms

*Ripple and Noise are measured at 20MHz bandwidth by using a 0.1µF (M/C) and 47µF (E/C) parallel capacitor.

Isolation Specifications

Parameters	Conditions	Typical	Rated	Units
Tested I/O voltage	60 sec		3000	VAC
Isolation Resistance		>1000		MΩ

General Specifications

Parameters	Conditions	Typical	Maximum	Units
Switching frequency		66		KHz
Over load protection	Foldback	130		%
Over voltage protection	Zener Diode Clamp			
Short circuit protection	Auto recovery			
Operating temperature	With derating over 60ºC, see chart	Refer to model application		ºC
Storage temperature		-40 to +95		ºC
Maximum case temperature			100	ºC
Temperature coefficient		0.02		% / ºC
Cooling	Free air convection			
Humidity	Non condensing	20 ~ 95		% RH
Case material	Plastic (flammability to UL 94V-0)			
Weight		30		g
Dimensions (L x W x H)	51.60 x 28.30 x 18.00mm (2.03 x 1.11 x 0.71 inches)			
MTBF	> 400,000 hrs (MIL-HDBK -217F, t=+25ºC)/Full Load > 100,000 hrs (MIL-HDBK -217F, t=at highest operating temperature)/Full Load			

NOTE: All specifications in this datasheet are measured at an ambient temperature of 25°C, humidity<75%, nominal input voltage and at rated output load unless otherwise specified.

Environment Approval

Test	Parameters	Conditions
Shock	Wave form	Half sine wave
	Acceleration amplitude	5gn
	Bump duration	30ms
	Converter operation	Before and after test, body mounted (on chassis)
	Number of bumps	18 (3 in each direction for every axis)
Vibrations	Test mode	Sweep sine, 10-100Hz, speed 0.05Hz/s
	Displacement	1mm
	Acceleration	3g, 3 loops 30min one cycle, 3h total, every axis tested
	Converter operation	Before and after test, body mounted (on chassis)

Safety Specifications

Parameters		
Agency approvals	cULus for all models CE, CB (not including suffix “GAZ” models)	
Standards	Information technology Equipment	IEC\EN\UL 60950-1
	Information technology Equipment	EN 60950-1:2006+A11:2009
	EMI - Conducted and radiated emission	EN55022, class B
	Harmonic Current Emissions	IEC/EN 61000-3-2, Class A
	Voltage fluctuations and flicker	IEC/EN 61000-3-3, (EN60555-3)
	Electrostatic Discharge Immunity	IEC 61000-4-2 Air level 3, Contact level 2
	RF, Electromagnetic Field Immunity	IEC 61000-4-3 Level 2
	Electrical Fast Transient/Burst Immunity	IEC 61000-4-4 Level 2
	Surge Immunity	IEC 61000-4-5 Level 2
	RF, Conducted Disturbance Immunity	IEC 61000-4-6 Level 2
	Power frequency Magnetic Field Immunity	IEC 61000-4-8
	Voltage dips, Short Interruptions Immunity	IEC 61000-4-11

Additional Surge Protective Circuitry

The AMEL5-AZ series design level surge protection is certified to IEC 61000-4-5 surge Line to Line of 1KV. However greater protection can be enhanced by adding protective devices to ingress circuitry. For example, by adding an MOV (Metal Oxide Varistor) device example S14K320E2 to the N / L input lines 2KV surge protection or greater, can be achieved.

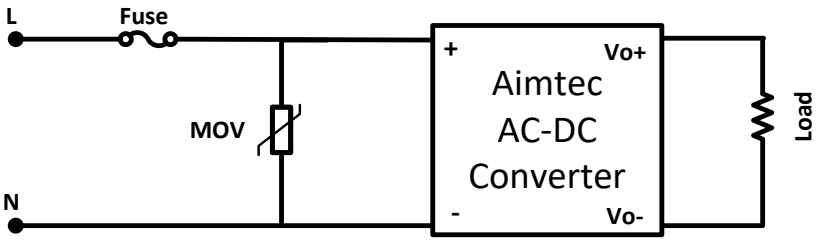

MOV PN	Vrms V	Vdc V	Wmax (2ms) J	Pmax W
S14K320E2	320	420	136	0.6

Pin Out Specifications

Pin	Single
1	AC Input (N)
2	AC Input (L)
3	+V Output
4	-V Output
5	No pin

Dimensions

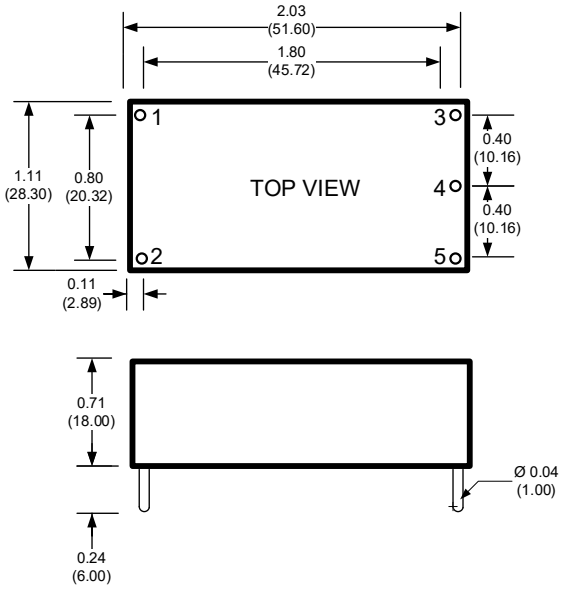

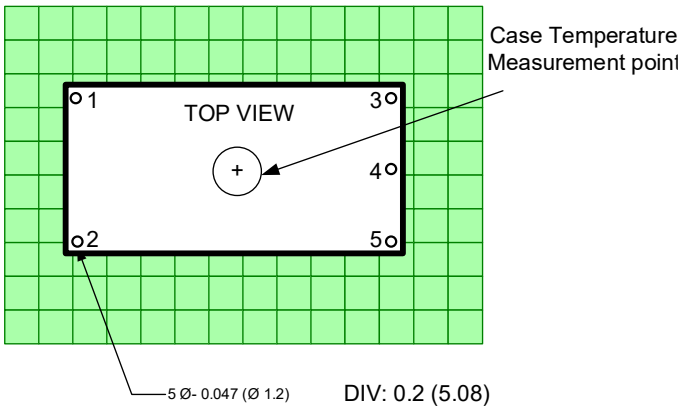

Dimensions: inch (mm)
Case Tolerance:± 0.02 (0.50)
Pin Pitch Tolerance: ± 0.02 (0.50)

Derating

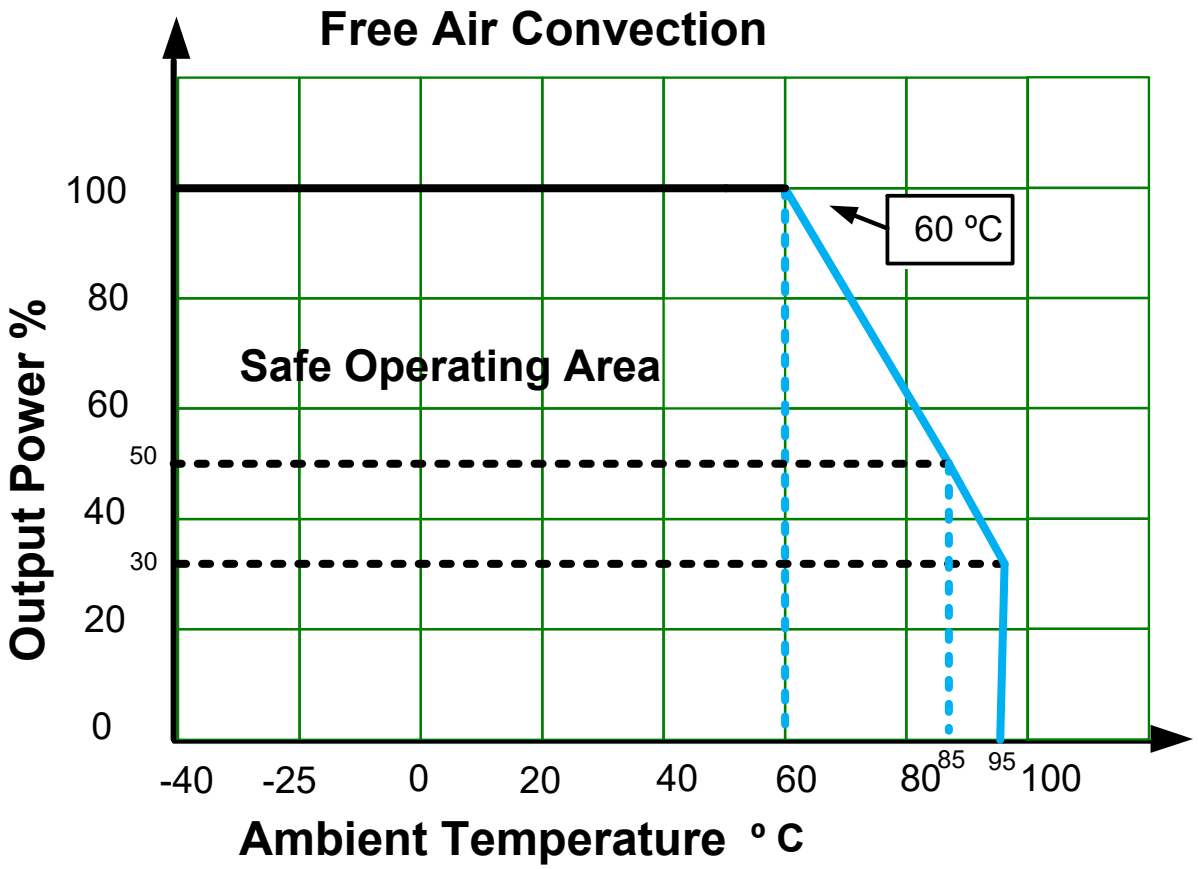

Earth/Ground Connection for AMEL5-xxSGAZ models

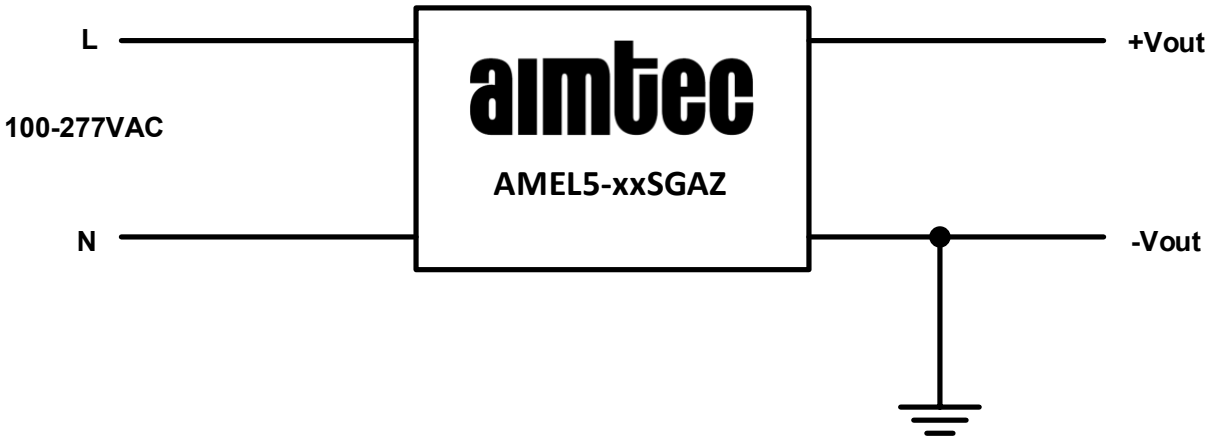

AMEL5-xxSGAZ models meet the EN55022 class B compliance when connected to Earth/Ground. These models are incorporating an EMC compliant filter and when connected to Earth/GND, no external filtering will be needed to meet the specified limits.

Models include: AMEL5-3.3SGAZ, AMEL5-5SGAZ, AMEL5-12SGAZ, AMEL5-15SGAZ, and AMEL5-24SGAZ

Dimensions of Optional ST Mounting Plate Version

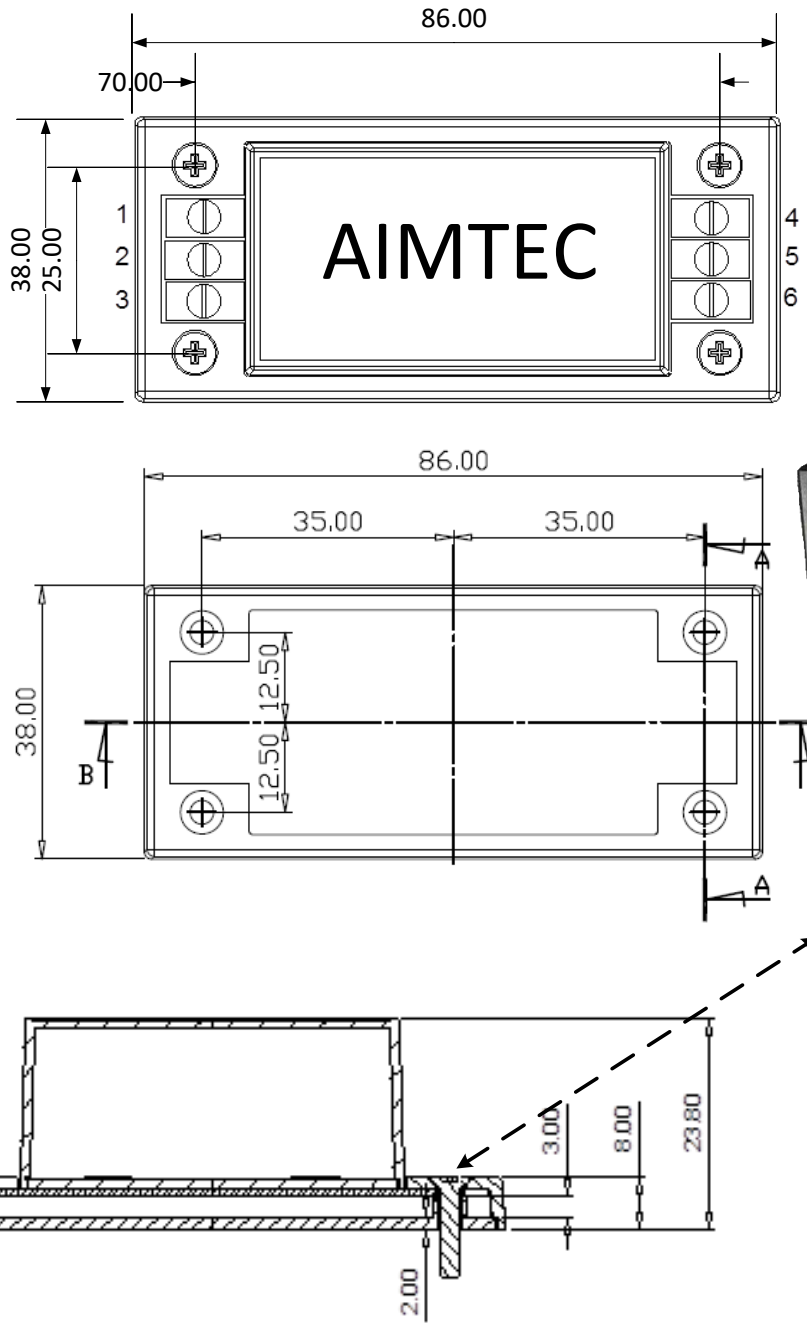

Pin Out Specification ST Version

Pin	Single
1	AC Input (N)
2	No pin
3	AC Input (L)
4	+V Output
5	Common
6	No pin



NOTE: 1. Datasheets are updated as needed and as such, specifications are subject to change without notice. Once printed or downloaded, datasheets are no longer controlled by Aimtec; refer to www.aimtec.com for the most current product specifications. **2.** Product labels shown, including safety agency certifications on labels, may vary based on the date manufactured. **3.** Mechanical drawings and specifications are for reference only. **4.** All specifications are measured at an ambient temperature of 25°C, humidity<75%, nominal input voltage and at rated output load unless otherwise specified. **5.** Aimtec may not have conducted destructive testing or chemical analysis on all internal components and chemicals at the time of publishing this document. CAS numbers and other limited information are considered proprietary and may not be available for release. **6.** This product is not designed for use in critical life support systems, equipment used in hazardous environments, nuclear control systems or other such applications which necessitate specific safety and regulatory standards other the ones listed in this datasheet. **7.** Warranty is in accordance with Aimtec's standard Terms of Sale available at www.aimtec.com.