Click to ORDER samples

AMA6E-LPZ

Wall Mount Adapter

The AMA6E-LPZ is a small industrial grade wall mount adapter offering a commercial input voltage range of 90-264VAC and a maximum output power of 6W. This adapter will offer many benefits to powering your system such as low power consumption, high efficiency, meets EN/ETL62368-1, FCC, Class B, CISPR32, Class B.

It also features an isolation of 4242VDC for improved reliability and system safety and comes standard with output over-voltage protection (OVP), over current protection (OCP) and short circuit protection (SCP).

Features

- Wide Input: 90-264VAC
- Operating Temp: -10°C to +40 °C
- Isolation voltage: 4242VDC
- Low ripple & noise, 150mV(p-p), max
- Over current protection, over voltage protection and short circuit protection
- Leakage current: < 0.25mA

RoHS CE Intertek FC 2 yr Warranty

Summary

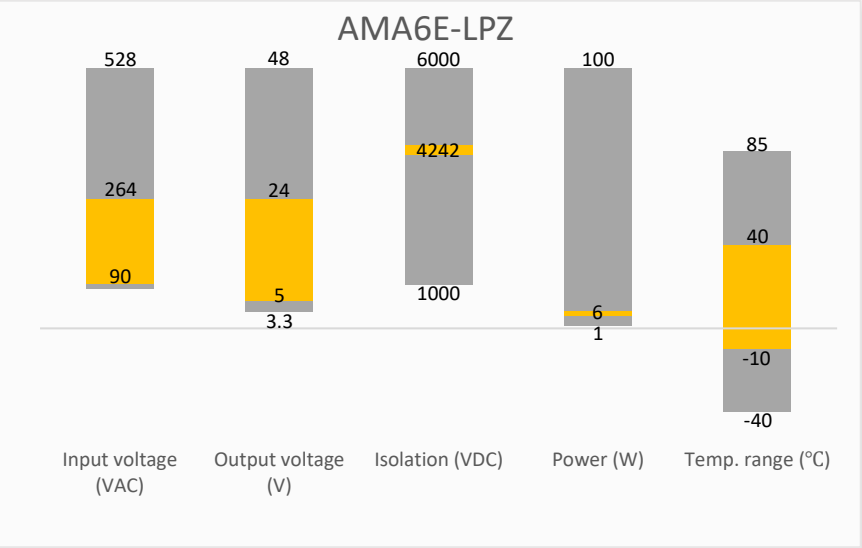

Training

Product Training Video (click to open)

Press Release

Coming Soon!

Application Notes

Applications

Portable Equipment

Industrial

Models & Specifications

General Features						
Model	Input Voltage (VAC/Hz)	Output Voltage (VDC)	Output Current max (A)	Output Power max (W)	Full Load Efficiency min. (%)	Average Efficiency min. (%)*
AMA6E-050100LPZ	90~264/47~63	5	1	5	71	73.62
AMA6E-050120LPZ	90~264/47~63	5	1.2	6	73	75.00
AMA6E-050150LPZ	90~264/47~63	5	1.5	7.5	75	76.65
AMA6E-090065LPZ	90~264/47~63	9	0.65	5.85	75	78.72
AMA6E-120050LPZ	90~264/47~63	12	0.5	6	75	78.88
AMA6E-150040LPZ	90~264/47~63	15	0.4	6	75	78.88
AMA6E-240025LPZ	90~264/47~63	24	0.25	6	75	78.88

Please refer to below coding rule for completed part numbers. Eg. AMA6EB8-240025LPZ for industrial grade adapter with EU wall plug which comes with 5.5mm*2.1mm*12mm straight barrel style output plug.
*: The average efficiency is tested at 25%, 50%, 75% and 100% rated load, after 30 minutes warm up.

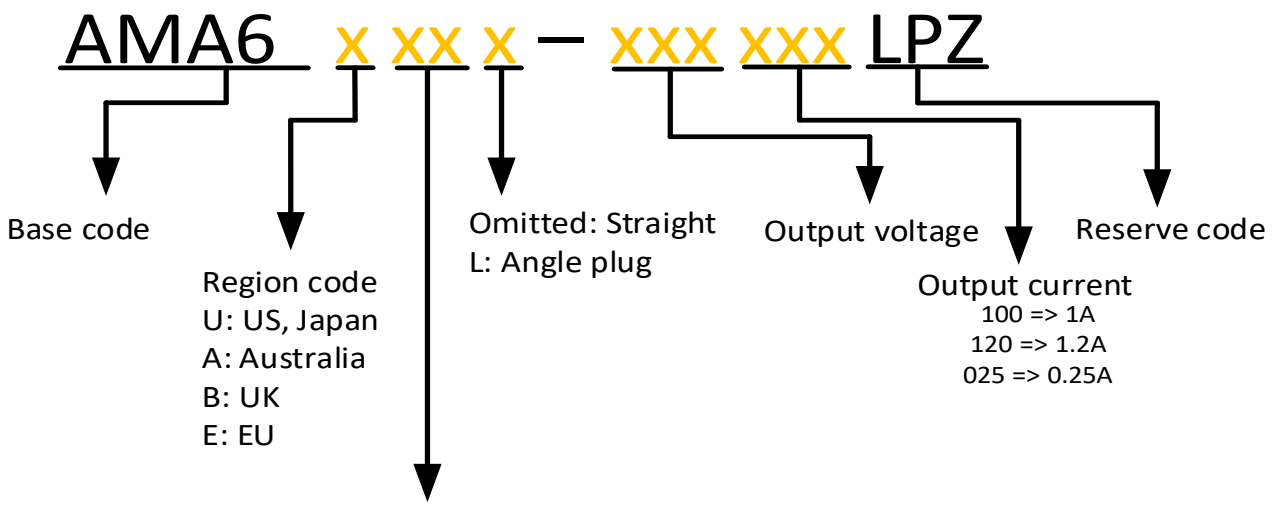

Plug type	Code	O. D.	I. D.	Length
Standard	B8	5.50mm	2.10mm	12.00mm
	B9	5.50mm	2.50mm	12.00mm
	B10	3.50mm	1.35mm	12.00mm
	B11	3.80mm	1.35mm	12.00mm
	B12	3.80mm	1.05mm	12.00mm
Min. Pin	M4	2.35mm	0.70mm	12.00mm
	M5	4.00mm	1.70mm	12.00mm
	M6	4.75mm	1.70mm	12.00mm
USB	U1	Micro USB		
	U2	USB type C		
Wire	WI	Wire with stripped ends		

Input Specifications

Parameters	Conditions	Typical	Maximum	Units
Voltage range		100 - 240	90 - 264	VAC
Frequency		50 - 60	47 - 63	Hz
Input Current	100VAC	0.2		A
Inrush Current	230VAC, cold start	40		A
Leakage Current	240VAC, 50Hz	<0.25		mA

Output Specifications

Parameters	Conditions	Typical	Maximum	Units
Voltage regulation	Rated load		± 5	%
Ripple & Noise*	20MHz bandwidth	80	150	mV p-p
Start-up time	100VAC input, full load		3	s
Rise time	100VAC input, full load		100	ms

* Ripple and Noise are measured at 20MHz bandwidth by using 0.1µF ceramic capacitor and 10µF electrolytic capacitor in parallel.

Isolation Specifications

Parameters	Conditions	Typical	Maximum	Units
Tested I/O voltage	Input to Output, 60 sec, leakage current < 5mA	4242		VDC
Insulation resistance	Input to Output, 500VDC	>10		MΩ

General Specifications

Parameters	Conditions	Typical	Maximum	Units
Over current protection	AMA6E-050100LPZ, Hiccup mode, auto recovery	>1.60		A
	AMA6E-050120LPZ, Hiccup mode, auto recovery	>1.60		A
	AMA6E-050150LPZ, Hiccup mode, auto recovery		1.6~2.2	A
	AMA6E-090065LPZ, Hiccup mode, auto recovery	>1.00		A
	AMA6E-120050LPZ, Hiccup mode, auto recovery		0.6~1.2	A
	AMA6E-150040LPZ, Hiccup mode, auto recovery	>0.65		A
	AMA6E-240025LPZ, Hiccup mode, auto recovery		0.3~0.5	A
Over voltage protection	Hiccup mode, recovers automatically after fault condition is removed			
Short circuit protection	Hiccup mode, recovers automatically after fault condition is removed			
Operating temperature	10 ~ 90% RH	-10 to +40		°C
Storage temperature	10 ~ 95% RH	-25 to +85		°C
No load power consumption	115/230VAC		0.1	W
Vibration	10~30Hz, 1G, 3.5mm offset, 60 minutes along each X, Y, Z			
DOE Level	VI			
Weight	US	77.5		g
	EU	87.5		
	UK	87.5		
	AU	77.5		
Dimensions (L x W x H)	US	2.28 x 1.46 x 1.28 inches (58.00 x 37.10 x 32.50 mm)		
	EU	2.28 x 1.46 x 1.73 inches (58.00 x 37.10 x 44.00 mm)		
	UK	2.28 x 1.46 x 1.28 inches (58.00 x 37.10 x 32.50 mm)		
	AU	2.28 x 1.46 x 1.36 inches (58.00 x 37.10 x 34.50 mm)		

Output cable length	59.06 inches (1500mm)
MTBF	> 50 000 hrs min. MIL-HDBK-217F(25°C)
NOTE: All specifications in this datasheet are measured at an ambient temperature of 25°C, humidity<75%, nominal input voltage and at rated output load unless otherwise specified.	

Safety Specifications		
Parameters		
Agency approvals	ETL62368-1, EN62368-1	
Standards	Information technology Equipment	Designed to meet IEC62368-1
	EMC - Conducted and radiated emission	FCC Part 15B, EN55035 Class B CISPR32/EN55032 Class B
	Harmonic Current emission	EN 61000-3-2, Class B
	Voltage Fluctuations & Flicker	EN 61000-3-3, Class B

DC output plug

Barrel Style (Straight or Right-angled)

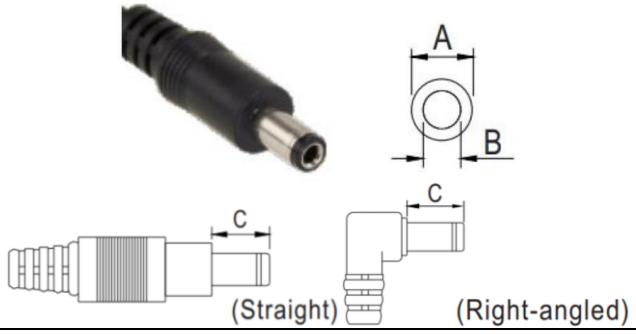

Type Number and Dimensions (mm)			
Code No.	A Outer Diameter	B Inner Diameter	C Length
B8	5.5	2.1	12
B9	5.5	2.5	12
B10	3.5	1.35	12
B11	3.8	1.35	12
B12	3.8	1.05	12

Min. Pin Style

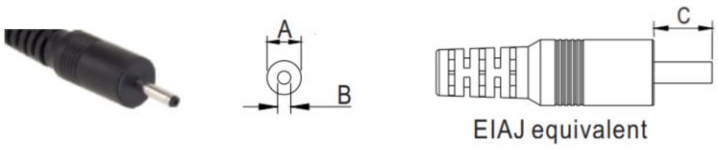

Type No.	A Outer Diameter	B Inner Diameter	C Length
M4	2.35	0.7	12.0
M5	4.00	1.7	12.0
M6	4.75	1.7	12.0

Micro USB Connector

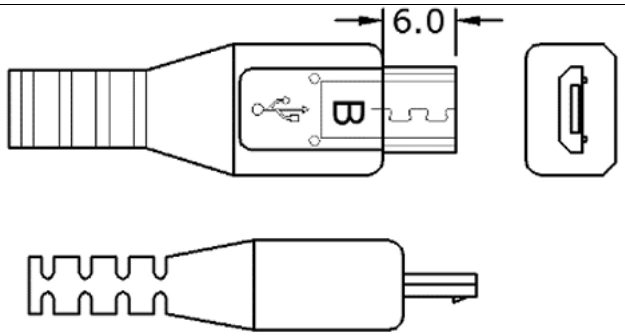

USB TYPE-C Connector

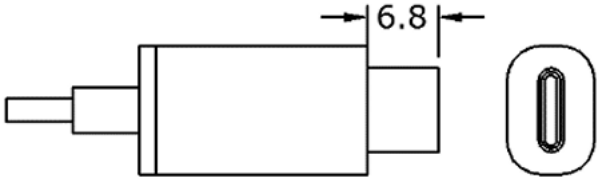

Wire with Stripped Ends

Wire Out Configurations	
Wire No.	Description
1	+Vout
2	-Vout

Dimensions

US Plug:

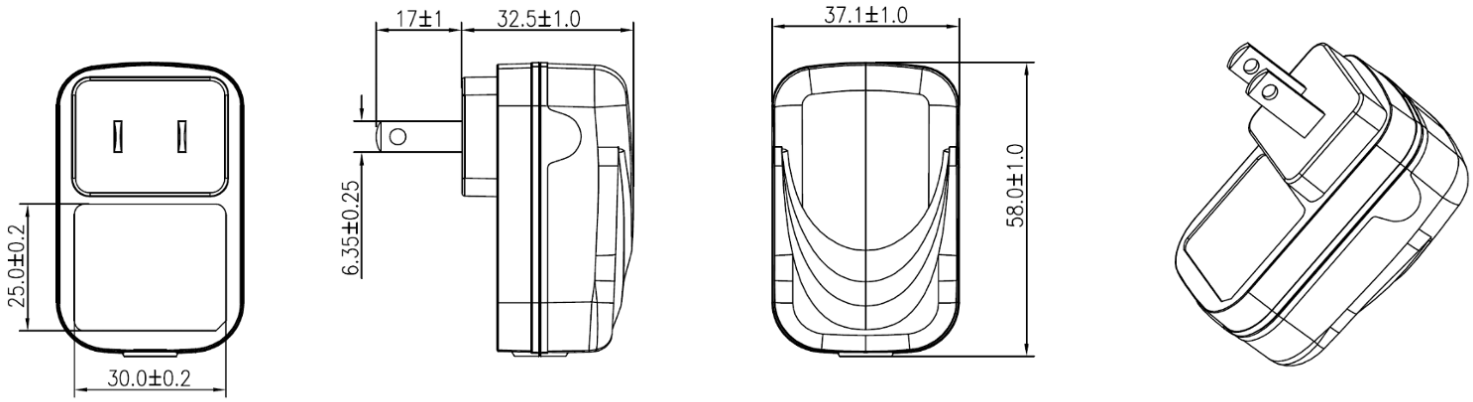

EU Plug:

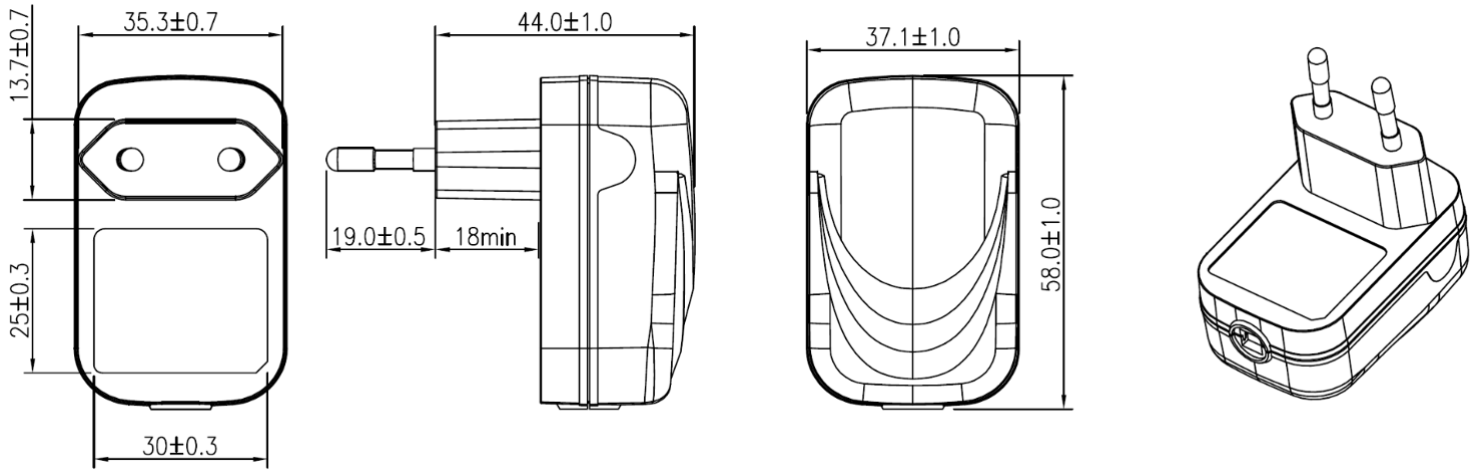

UK Plug:

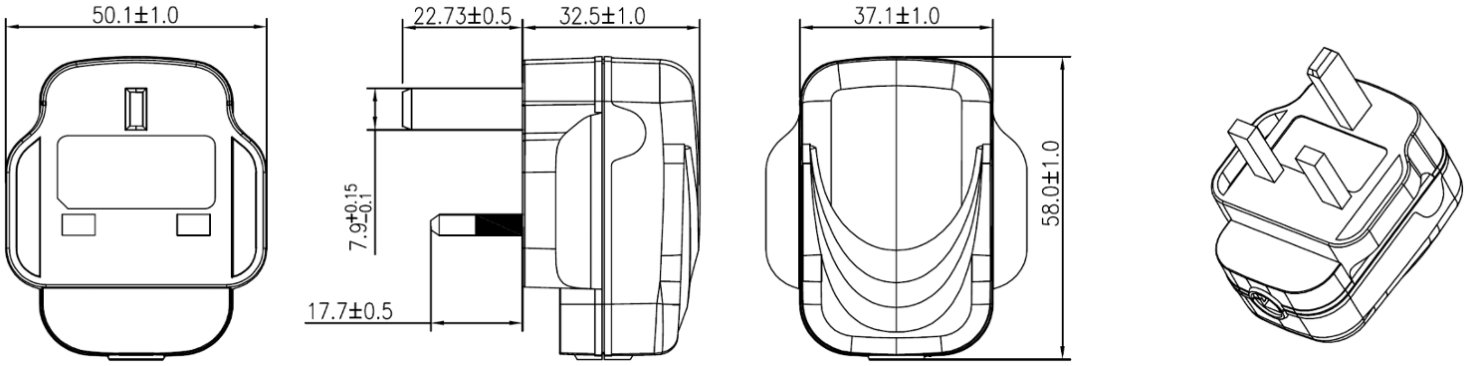

AU Plug:

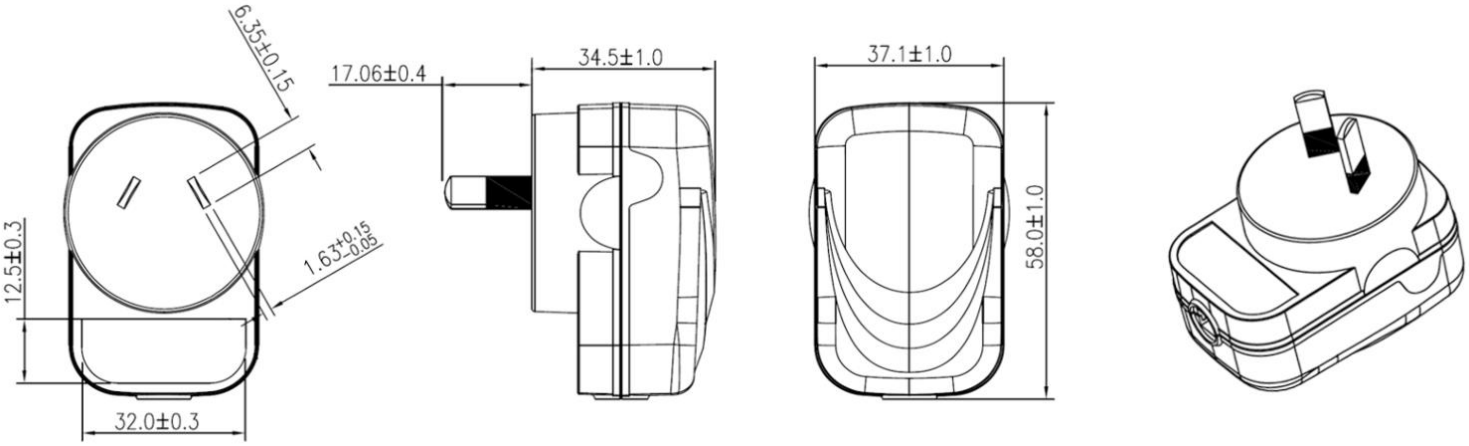

NOTE: 1. Datasheets are updated as needed and as such, specifications are subject to change without notice. Once printed or downloaded, datasheets are no longer controlled by Aimtec; refer to www.aimtec.com for the most current product specifications. **2.** Product labels shown, including safety agency certifications on labels, may vary based on the date manufactured. **3.** Mechanical drawings and specifications are for reference only. **4.** All specifications are measured at an ambient temperature of 25°C, humidity<75%, nominal input voltage and at rated output load unless otherwise specified. **5.** Aimtec may not have conducted destructive testing or chemical analysis on all internal components and chemicals at the time of publishing this document. CAS numbers and other limited information are considered proprietary and may not be available for release. **6.** This product is not designed for use in critical life support systems, equipment used in hazardous environments, nuclear control systems or other such applications which necessitate specific safety and regulatory standards other the ones listed in this datasheet. **7.** Warranty is in accordance with Aimtec's standard Terms of Sale available at www.aimtec.com. **8.** Adapters are intended for industrial use only.